US005452216A

United States Patent [19]

Mounce

[11] Patent Number: 5,452,216

[45] Date of Patent: Sep. 19, 1995

[54] MICROPROCESSOR-BASED NAVIGATIONAL AID SYSTEM WITH EXTERNAL ELECTRONIC CORRECTION

[76] Inventor: George R. Mounce, R R 2 Hants County, Newport, Nova Scotia Bon 2A0, Canada

[21] Appl. No.: 100,410

[22] Filed: Aug. 2, 1993

[51] Int. Cl.[6] G06F 165/00

[52] U.S. Cl. 364/449; 364/450; 342/357; 73/180

[58] Field of Search ..... 364/443, 444, 449, 450; 342/357, 451; 73/178 R, 170.02, 170.03, 180

[56] References Cited

U.S. PATENT DOCUMENTS

4,335,433	6/1982	Bauer et al.	364/443
4,340,936	7/1982	Mounce	364/443
4,445,118	4/1984	Taylor et al.	343/357
4,599,620	7/1986	Evans	343/357
4,652,884	3/1987	Starker	342/357
4,785,404	11/1988	Sims et al.	364/443
4,872,118	10/1989	Naidenov et al.	364/463
4,881,080	11/1989	Jablonski	342/357
4,894,662	1/1990	Counselman	342/357
4,899,285	2/1990	Nakayama et al.	364/449
4,903,212	2/1990	Yokouchi et al.	364/449
4,939,661	7/1990	Barker et al.	364/521
4,990,922	2/1991	Young et al.	342/52
5,307,277	4/1994	Hirano	364/449

FOREIGN PATENT DOCUMENTS

57-91405	6/1982	Japan .
59-56107	3/1984	Japan .
59-56108	3/1984	Japan .
61-159107	7/1986	Japan .
61-247916	11/1986	Japan .

Primary Examiner—Michael Zanelli
Attorney, Agent, or Firm—Dowell & Dowell

[57] ABSTRACT

An improved microprocessor-based navigational aid system for use onboard a vessel is disclosed. The system includes a microprocessor having peripheral memory devices, sensors for measuring variable parameters and thumb switches for inserting known values for fixed parameters. The microprocessor computes from these parameters, data which enable the optimum navigation of a vessel. In determining these data, the computation includes such factors as leeway and current set and drift, which are determined electronically. The system includes components for receiving information regarding the vessel's present position from a satellite-based external information source. That information is relayed to the microprocessor which uses it to periodically correct the positional information stored in the peripheral memory device. The system further includes a sensor for measuring the heel angle of the vessel, a first display providing alpha and numeric readouts of the direction of movement of the vessel with respect to the earth, and a second display simultaneously providing alpha and numeric readouts of a selectable quantity.
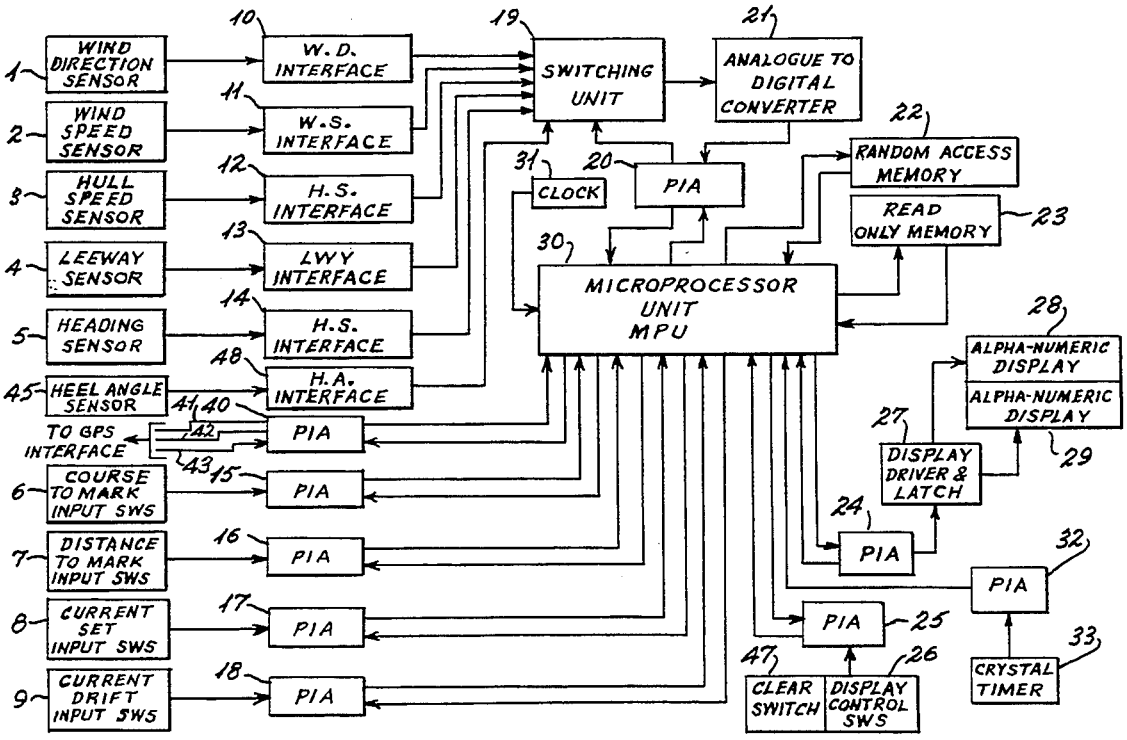
20 Claims, 4 Drawing Sheets