US007947316B2

(12) **United States Patent**
Kirschner et al.

(10) **Patent No.: US 7,947,316 B2**
(45) **Date of Patent: May 24, 2011**

(54) **POD FOR DISPERSIBLE MATERIALS**

(75) Inventors: **Jonathan Kirschner**, Powder Springs, GA (US); **Paul A. Phillips**, Marietta, GA (US)

(73) Assignee: **The Coca-Cola Company**, Atlanta, GA (US)

(*) Notice: Subject to any disclaimer, the term of this patent is extended or adjusted under 35 U.S.C. 154(b) by 1306 days.

(21) Appl. No.: **11/462,444**

(22) Filed: **Aug. 4, 2006**

(65) **Prior Publication Data**

US 2008/0028948 A1 Feb. 7, 2008

(51) **Int. Cl.**
A47J 31/06 (2006.01)

(52) **U.S. Cl.** **426/77**; 426/426; 99/275; 99/295

(58) **Field of Classification Search** 426/77, 426/426; 99/275, 295
See application file for complete search history.

(56) **References Cited**

U.S. PATENT DOCUMENTS

1,951,357	A	3/1934	Hall	
2,589,783	A *	3/1952	Crossley et al.	99/295
2,743,664	A	5/1956	Dale	
2,778,739	A	1/1957	Rodth	
2,968,560	A	1/1961	Goros	
3,151,418	A	10/1964	Powell et al.	
3,269,298	A *	8/1966	Grundmann	99/289 R
3,275,448	A	9/1966	Sommer	
3,428,460	A	2/1969	Ely	
3,589,272	A	6/1971	Bouladon	
3,713,842	A	1/1973	Lubsen et al.	
3,812,273	A	5/1974	Schmidt	
3,823,656	A	7/1974	Vekekn	
3,888,999	A	6/1975	Jones et al.	
3,952,641	A	4/1976	Vitous	
4,011,969	A *	3/1977	Martin	222/196
4,081,560	A	3/1978	Ishigaki	
4,107,339	A	8/1978	Shrimpton	
4,136,202	A	1/1979	Favre	
4,158,330	A	6/1979	Vitous	
4,254,694	A	3/1981	Illy	
4,429,623	A	2/1984	Illy	
4,436,125	A *	3/1984	Blenkush	141/330
4,471,689	A	9/1984	Piana	
4,581,239	A	4/1986	Woolman et al.	
4,644,855	A	2/1987	Woolman et al.	
4,798,732	A	1/1989	Osawa	
4,829,889	A	5/1989	Takeuchi et al.	
4,846,052	A	7/1989	Favre et al.	

(Continued)

FOREIGN PATENT DOCUMENTS

BE	701863	1/1968

(Continued)

OTHER PUBLICATIONS

Brasilia S.p.A., PDM100 Spare Parts Catalog, Jan. 25, 2007, 35 pgs., Rev. No. 12, Retorbido, Italy.

Primary Examiner — Anthony Weier
(74) *Attorney, Agent, or Firm* — Sutherland Asbill & Brennan LLP

(57) **ABSTRACT**

A pod for mixing an amount of a dispersible material with water. The pod may include a pod body having a lower aperture and a poppet positioned within the aperture. The poppet may be sized so as to seal the lower aperture until a predetermined pressure is reached within the pod body.
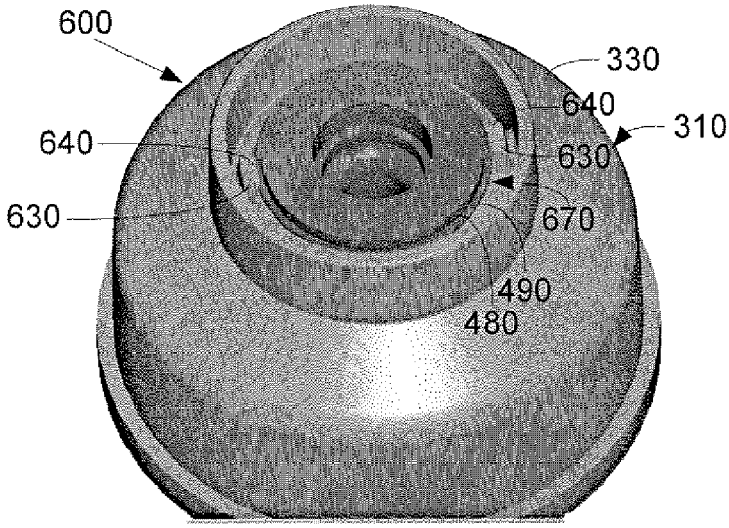
28 Claims, 5 Drawing Sheets