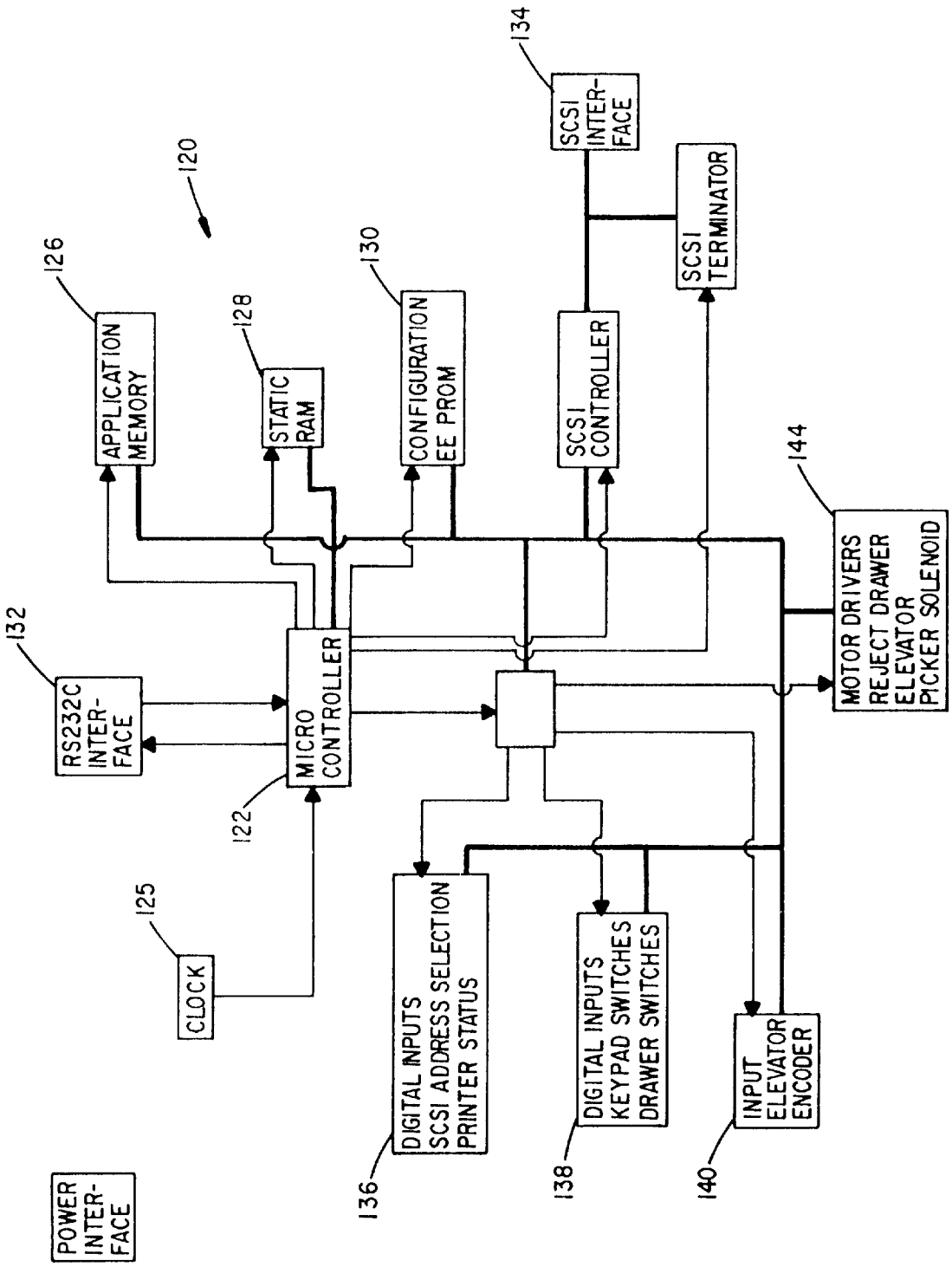
120
126
APPLICATION MEMORY
128
STATIC RAM
130
CONFIGURATION EE PROM
134
SCSI INTER-FACE
SCSI TERMINATOR
SCSI CONTROLLER
144
MOTOR DRIVERS REJECT DRAWER ELEVATOR PICKER SOLENOID
132
RS232C INTER-FACE
MICRO CONTROLLER
122
125
CLOCK
DIGITAL INPUTS SCSI ADDRESS SELECTION PRINTER STATUS
136
DIGITAL INPUTS KEYPAD SWITCHES DRAWER SWITCHES
138
INPUT ELEVATOR ENCODER
140
POWER INTER-FACE

FIG. 10