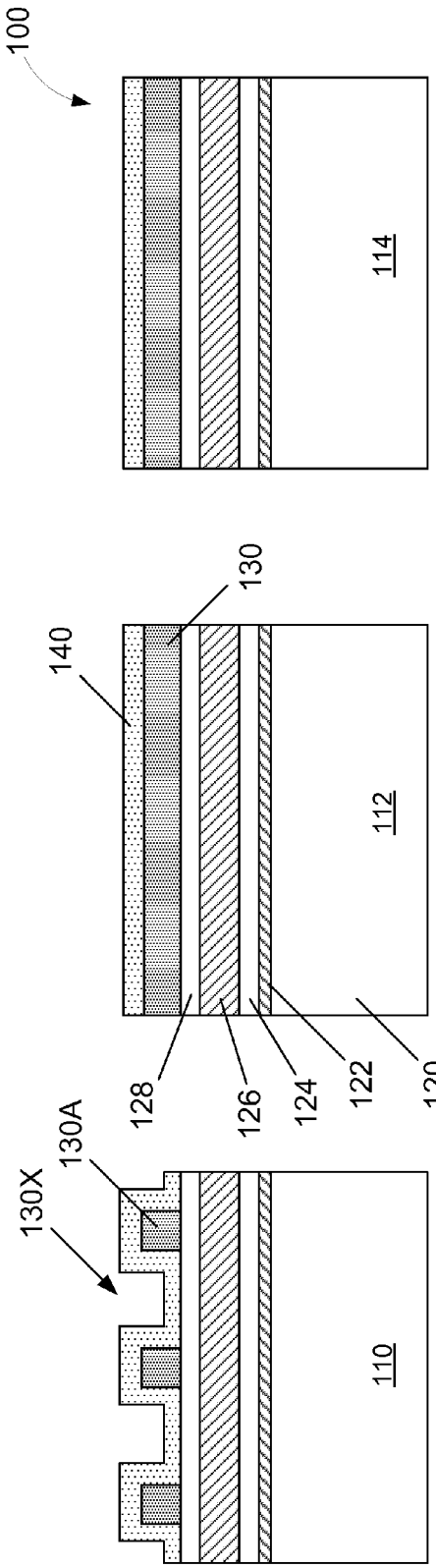

Figure 2C

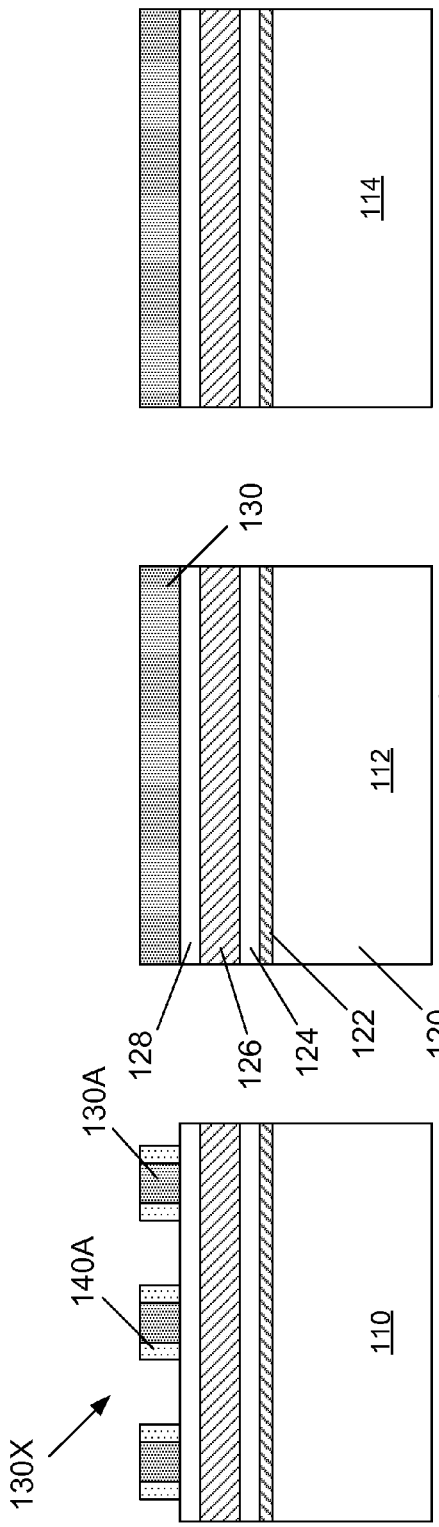

Figure 2D