US009636616B2

(12) **United States Patent**
Furuyama et al.

(10) **Patent No.: US 9,636,616 B2**
(45) **Date of Patent: *May 2, 2017**

(54) **WATER-PROOF AIR-PERMEABLE FILTER AND USE OF THE SAME**

(71) Applicant: **NITTO DENKO CORPORATION**, Ibaraki-shi, Osaka (JP)

(72) Inventors: **Satoru Furuyama**, Osaka (JP); **Yozo Nagai**, Osaka (JP); **Junichi Moriyama**, Osaka (JP)

(73) Assignee: **NITTO DENKO CORPORATION**, Osaka (JP)

(*) Notice: Subject to any disclaimer, the term of this patent is extended or adjusted under 35 U.S.C. 154(b) by 0 days.

This patent is subject to a terminal disclaimer.

(21) Appl. No.: **14/638,659**

(22) Filed: **Mar. 4, 2015**

(65) **Prior Publication Data**

US 2015/0174517 A1 Jun. 25, 2015

Related U.S. Application Data

(63) Continuation of application No. 13/702,833, filed as application No. PCT/JP2011/001698 on Mar. 23, 2011, now Pat. No. 9,005,334.

(30) **Foreign Application Priority Data**

Jun. 16, 2010 (JP) 2010-136828

(51) **Int. Cl.**
B01D 53/22 (2006.01)
B01D 46/00 (2006.01)
(Continued)

(52) **U.S. Cl.**
CPC ***B01D 46/0023*** (2013.01); ***B01D 39/16*** (2013.01); ***B01D 39/1692*** (2013.01);
(Continued)

(58) **Field of Classification Search**
CPC B01D 53/22; B01D 46/0023; B01D 39/16; B01D 39/1692; B01D 46/54;
(Continued)

(56) **References Cited**

U.S. PATENT DOCUMENTS

4,161,948 A 7/1979 Bichon
4,459,139 A 7/1984 vonReis et al.
(Continued)

FOREIGN PATENT DOCUMENTS

DE 19536033 4/1997
EP 2219387 8/2010
(Continued)

OTHER PUBLICATIONS

"Standard deviation" 1 pg, American Heritage Dictionary of the English Language, Fifth Edition. 2011 by Houghton Mifflin Harcourt Publishing Company.*
(Continued)

Primary Examiner — Anthony Shumate
(74) *Attorney, Agent, or Firm* — Hamre, Schumann, Mueller & Larson, P.C.

(57) **ABSTRACT**

A water-proof air-permeable filter (**1**) includes: a resin film (**2**) having formed therein a plurality of through pores (**21**); and a treated layer (**3**) having hydrophobicity and oil repellency, and formed on at least one of both surfaces in the thickness direction of the resin film (**2**) such that the treated layer (**3**) has openings (**31**) at positions corresponding to the through pores (**21**). The through pores (**21**) each have a predetermined size larger than or equal to 0.01 μm and smaller than or equal to 10 μm, and are uniformly distributed such that a density of the through pores falls within specific limits included in a range from 10 to 1×10^8 pores/mm^2.
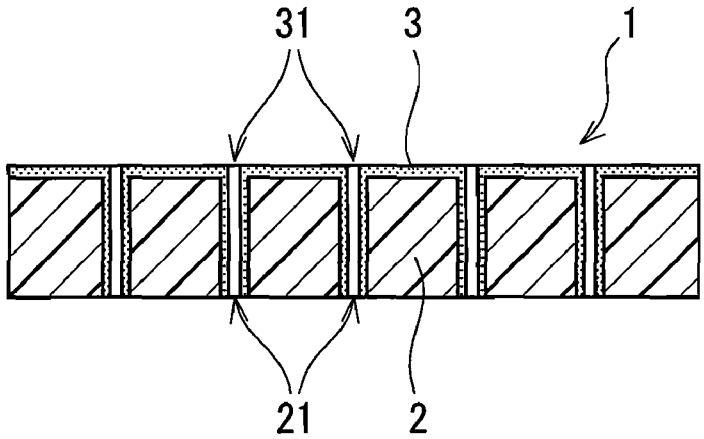
19 Claims, 1 Drawing Sheet