US009636116B2

(12) **United States Patent**
Rudakov et al.

(10) **Patent No.: US 9,636,116 B2**
(45) **Date of Patent: May 2, 2017**

(54) **IMPLANTABLE LUMINAL DEVICES**

(71) Applicant: **Artventive Medical Group, Inc.**, San Marcos, CA (US)

(72) Inventors: **Leon Rudakov**, San Marcos, CA (US); **Andrew Black**, Johnsburg, IL (US); **Andrew R. Leopold**, Hawthorn Woods, IL (US); **Kelly Jensen**, Palatine, IL (US)

(73) Assignee: **Artventive Medical Group, Inc.**, San Marcos, CA (US)

(*) Notice: Subject to any disclaimer, the term of this patent is extended or adjusted under 35 U.S.C. 154(b) by 83 days.

(21) Appl. No.: **14/304,869**

(22) Filed: **Jun. 13, 2014**

(65) **Prior Publication Data**

US 2014/0371778 A1 Dec. 18, 2014

Related U.S. Application Data

(63) Continuation-in-part of application No. 14/101,171, filed on Dec. 9, 2013.
(Continued)

(51) **Int. Cl.**
A61B 17/12 (2006.01)

(52) **U.S. Cl.**
CPC ***A61B 17/12109*** (2013.01); ***A61B 17/1204*** (2013.01); ***A61B 17/1214*** (2013.01); ***A61B 17/1215*** (2013.01); ***A61B 17/12036*** (2013.01); ***A61B 17/12136*** (2013.01); ***A61B 17/12145*** (2013.01); ***A61B 17/12172*** (2013.01); ***A61B 17/12177*** (2013.01); *A61B 2017/1205* (2013.01)

(58) **Field of Classification Search**
CPC A61B 17/12036; A61B 17/1204; A61B 17/12109; A61B 17/12022; A61B 17/1214; A61B 17/12145; A61B 2017/1205; A61B 2017/12054; A61F 2002/9505; A61F 2002/9511
See application file for complete search history.

(56) **References Cited**

U.S. PATENT DOCUMENTS

3,805,767 A 4/1974 Erb
3,868,956 A 3/1975 Alfidi et al.
(Continued)

FOREIGN PATENT DOCUMENTS

CN 2527227 Y 12/2002
DE 202008007775 U1 8/2008
(Continued)

OTHER PUBLICATIONS

Aydogan, Transcatheter Embolization Treatment of Coronary Arteriovenous Fistulas, Asian Cardiovascular & Thoracic Annals, 2003, pp. 63-67, vol. 11, No. 1.
(Continued)

Primary Examiner — Alexander Orkin
(74) *Attorney, Agent, or Firm* — Nathan S. Smith; McDermott Will & Emery LLP

(57) **ABSTRACT**

An implant may include a frame and a cover to facilitate endoluminal vessel occlusion, selective release of embolic material toward a target region, and/or endoluminal stenting. The frame of the implant provides radial expansion properties to secure the cover within a body vessel. The cover and/or the frame can occlude flow of a fluid through the body vessel.
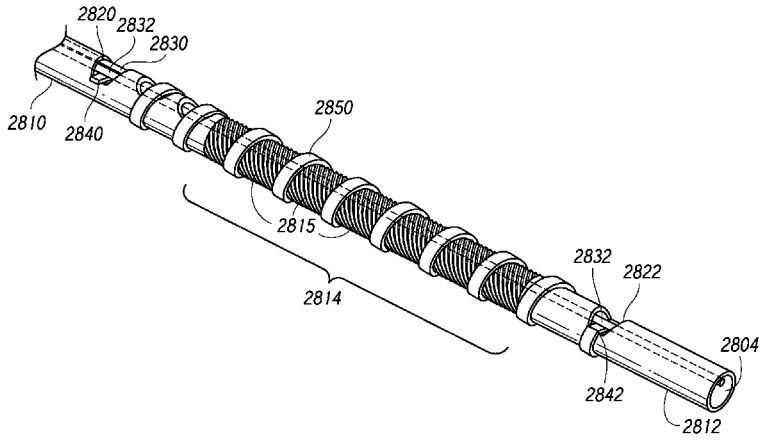
19 Claims, 69 Drawing Sheets