United States Patent [19]

Vogt

[11] **Patent Number: 4,729,616**

[45] **Date of Patent: Mar. 8, 1988**

[54] **DRAWERS FOR SINK CABINETS**

[75] Inventor: **James B. Vogt**, Ada, Mich.

[73] Assignee: **Vogt Industries, Inc.**, Kentwood, Mich.

[21] Appl. No.: **938,873**

[22] Filed: **Dec. 8, 1986**

[51] **Int. Cl.**[4] **A47B 88/00**

[52] **U.S. Cl.** **312/325**; 312/266; 220/74; 220/23.4; 220/332; 220/333

[58] **Field of Search** 220/74, 23.4, 23.83, 220/DIG. 6, 66, 332, 333; 312/228, 229, 325, 326, 327, 328, 266

[56] **References Cited**

U.S. PATENT DOCUMENTS

683,892	10/1901	Bachia	312/31 X
1,888,345	11/1932	Cummings .	
2,130,663	9/1938	Baker .	
2,673,003	3/1954	Stewart	220/74
3,292,983	12/1966	Service .	
3,425,766	2/1969	Crisera .	
3,698,783	10/1972	Swett et al.	312/229 X
4,241,963	12/1980	Seidel .	

FOREIGN PATENT DOCUMENTS

2359467	6/1975	Fed. Rep. of Germany .	
2614906	10/1977	Fed. Rep. of Germany	312/325
2806618	8/1979	Fed. Rep. of Germany .	

Primary Examiner—Joseph Falk

Attorney, Agent, or Firm—Varnum, Riddering, Schmidt & Howlett

[57] **ABSTRACT**

A hinge assembly mounting a drawer panel on a sink cabinet for movement between closed and open positions in which a tray movable with the drawer panel is contained within the cabinet and in which it is accessible from without the cabinet. The hinge assembly is concealed from view when the drawer panel is in the closed position, and the drawer panel is wholly spaced from the cabinet in the open position. The drawer panel is constructed to move between the open and closed positions in a single curved path.
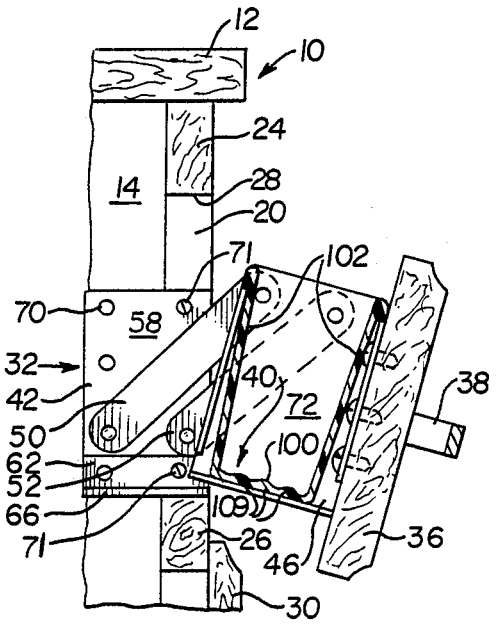
7 Claims, 10 Drawing Figures