United States Patent [19]

Wilson

[11] **Patent Number: 5,025,516**

[45] **Date of Patent: Jun. 25, 1991**

[54] **AUTOMATIC FAUCET**

[75] Inventor: **John R. Wilson**, Naperville, Ill.

[73] Assignee: **Sloan Valve Company**, Franklin Park, Ill.

[21] Appl. No.: **428,905**

[22] Filed: **Oct. 30, 1989**

Related U.S. Application Data

[63] Continuation of Ser. No. 173,883, Mar. 28, 1988, Pat. No. 4,894,874.

[51] **Int. Cl.**[5] **E03C 1/05**

[52] **U.S. Cl.** **4/623**; 250/221; 251/129.01

[58] **Field of Search** ..... 4/623, DIG. 3, 304, 4/302, 305; 250/221; 251/129.01-129.06

[56] **References Cited**

U.S. PATENT DOCUMENTS

3,393,600	7/1968	Bess	250/221 X
3,480,787	11/1969	Johansen	250/221
4,185,192	1/1980	Wagner	250/221
4,306,147	12/1981	Fukuyama et al.	250/221
4,346,293	8/1982	Fetzer	250/221
4,356,387	10/1982	Tsubota et al.	250/221 X
4,681,141	7/1987	Wang	4/623 X
4,688,277	8/1987	Kakinoki et al.	4/623
4,762,273	8/1988	Gregory et al.	4/623 X
4,767,922	8/1988	Stauffer	250/221

FOREIGN PATENT DOCUMENTS

2513737	10/1975	Fed. Rep. of Germany	4/623
2721217	11/1978	Fed. Rep. of Germany .	
3225777	9/1988	Japan	251/129.01
1416262	12/1975	United Kingdom	251/129.04
8501337	3/1985	World Int. Prop. O. .	

Primary Examiner—Ernest G. Cusick
Assistant Examiner—Casey Jacyna
Attorney, Agent, or Firm—Kinzer, Plyer, Dorn, McEachran & Jambor

[57] **ABSTRACT**

A faucet for automatic operation defining a base and an elongated cantilvered spout body provided with a discharge outlet. A sensing means for automatic operation in the form of an emitter and detector are mounted on the spout body intermediate the base and discharge outlet. The emitter and detector are positioned on the longitudinal center of the spout body and provide a concentrated zone of effective detection disposed intermediate the area of discharge from the faucet and the base. The zone shape is transversely elongated relative to the longitudinal center of the faucet spout body.
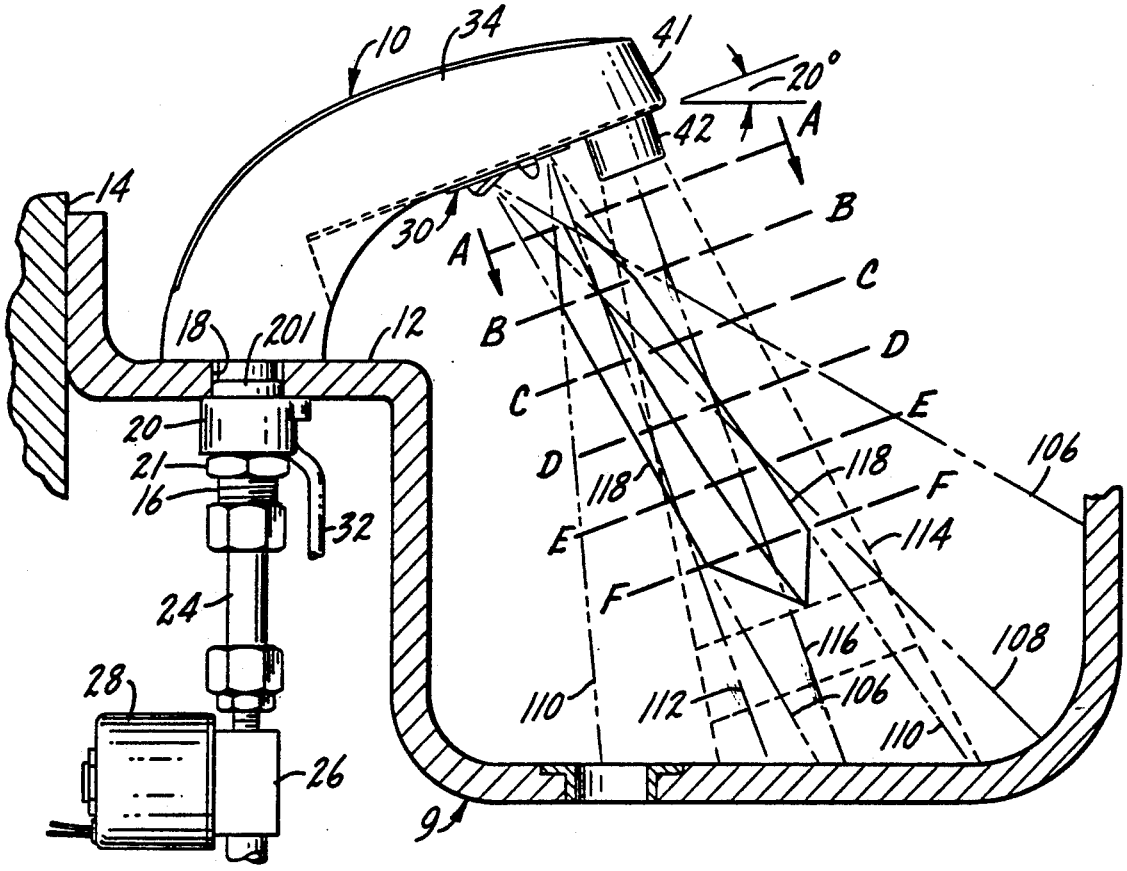
27 Claims, 2 Drawing Sheets