US005220316A

United States Patent [19]

Kazan

[11] **Patent Number: 5,220,316**

[45] **Date of Patent: Jun. 15, 1993**

[54] **NONLINEAR RESISTOR CONTROL CIRCUIT AND USE IN LIQUID CRYSTAL DISPLAYS**

[76] Inventor: **Benjamin Kazan**, 557 Tyndall St., Los Altos, Calif. 94022

[21] Appl. No.: **758,522**

[22] Filed: **Sep. 6, 1991**

Related U.S. Application Data

[63] Continuation of Ser. No. 375,133, Jul. 3, 1989, abandoned.

[51] **Int. Cl.**[5] **G09B 3/36**

[52] **U.S. Cl.** **340/784**; 340/719; 359/57

[58] **Field of Search** 340/784, 719, 765; 359/58, 55, 36, 57; 428/329; 338/20, 21; 264/56

[56] **References Cited**

U.S. PATENT DOCUMENTS

3,555,263	1/1971	Lejon	364/857
3,670,183	6/1972	Ager et al.	338/20
3,863,193	1/1975	Matsuura et al.	338/20
4,233,603	11/1980	Castleberry	359/58
4,272,754	6/1981	Lou	338/21
4,486,767	12/1984	Fraleux et al.	359/58
4,579,702	4/1986	Maruyama et al.	338/21
4,731,610	3/1988	Baron et al.	340/784
4,741,601	5/1988	Saito	359/58
4,748,445	5/1988	Togashi et al.	340/718
4,850,679	7/1989	Yamazaki	359/58
4,881,797	11/1989	Aoki et al.	350/339
4,933,727	6/1990	Mizuma et al.	355/212
4,959,262	9/1990	Charles et al.	338/20

OTHER PUBLICATIONS

T. Sato et al., "A Novel Back-to-Back Diode Element for Addressing LCDs", 1987 *Digest of the Society for Information Display*, pp. 59-61.

S. Togashi et al., "An LC-TV Display Controlled by a Si Diode Rings", *Proceedings of the SID*, vol. 26(1), pp. 9-15, 1985.

Z. Yaniv et al., "A New Amorphous-Silicon Alloy PIN Liquid Crystal Display", 1986 *Digest of the Society for Information Display*, pp. 278-280.

D. R. Baraff et al., "The Optimization of Metal-Insulator-Metal Nonlinear devices for Use in Multiplexed Liquid Crystal Displays", *IEEE Transactions on Electron Devices*, vol. ED-28, pp. 736-739, 1981.

D. H. Mash, "An Electroluminescent Digital Indicator With a Silicon Carbide Coding Matrix", *Journal of Scientific Instruments*, vol. 37 pp. 47-50, 1960.

B. Kazan et al., "An Electroluminescent Light-Amplifying Picture Panel", *Proceedings of the IRE*, vol. 42, pp. 1888-1897, 1955.

J. L. Fergason, "Polymer Encapsulated Nematic Crystals for Display and Light Control Applications", 1985 *Digest of the Society For Information Display*, pp. 68-70.

D. E. Castleberry et al., "2"×5" Varistor-Controlled Liquid Crystal Matrix Display", 1980 *Digest of the Society for Information Display*, pp. 198-199.

J. L. Fergason, "Polymer Polymer Encapsulated Nematic Crystals for Use in a High Resolution and Color Displays", 1986 *Digest of the Society For Information Display*, pp. 126-127.

Primary Examiner—Ulysses Weldon
Assistant Examiner—Doon Yue Chow
Attorney, Agent, or Firm—W. Douglas Carothers, Jr.

[57] **ABSTRACT**

A control circuit comprises a combination of two or more nonlinear resistor elements having a common electrical junction and a nonlinear current/voltage characteristic, the impedance at the common electrical junction being controlled in accordance with switching voltages applied to the nonlinear resistor elements. These nonlinear resistor elements may be connected to one terminal of a load element, such as a liquid crystal element or a printing element. An array of such load elements, such as printing elements or liquid crystal elements of the microencapsulated type, combined with these nonlinear resistor elements form, respectively, a printing engine or display device. The nonlinear resistor elements are composed of semiconducting or conducting powder particles bonded together with an insulating or semiconducting binder.
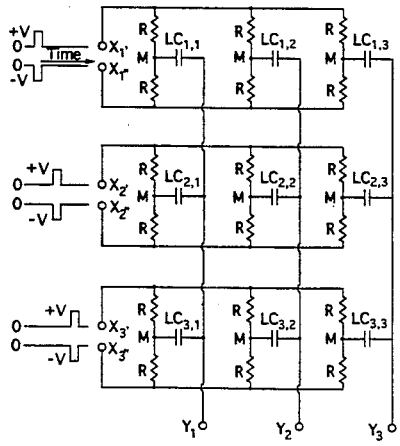
14 Claims, 2 Drawing Sheets