US005812116A

United States Patent [19]

Malhi

[11] **Patent Number: 5,812,116**

[45] **Date of Patent: Sep. 22, 1998**

[54] **LOW PROFILE KEYBOARD**

[75] Inventor: **Satwinder D. S. Malhi**, Garland, Tex.

[73] Assignee: **Texas Instruments Incorporated**, Dallas, Tex.

[21] Appl. No.: **657,703**

[22] Filed: **May 30, 1996**

[51] **Int. Cl.**[6] **G09G 5/00**

[52] **U.S. Cl.** **345/168**; 345/156; 345/169; 341/20; 341/22; 400/490; 400/491.1

[58] **Field of Search** ..... 345/156, 168, 345/169; 341/22, 20; 200/517, 512, 5 A; 400/490, 491, 491.1, 491.2

[56] **References Cited**

U.S. PATENT DOCUMENTS

3,707,609	12/1972	Dapot et al.	200/5 R
5,215,187	6/1993	Ping-Chieng et al.	200/517
5,386,091	1/1995	Clancy	200/517
5,399,824	3/1995	Chen	200/534
5,438,177	8/1995	Fagan	200/517
5,534,891	7/1996	Takano	345/169
5,684,279	11/1997	Burgett	200/5 A

Primary Examiner—Jeffery A. Hofsass
Assistant Examiner—Julie Lieu
Attorney, Agent, or Firm—Bret J. Petersen; James C. Kesterson; Richard L. Donalson

[57] **ABSTRACT**

A low profile and light weight keyboard for portable electronic devices, such as notebook computers. In specific embodiments, the present invention provides a low profile keyboard **218** where the keycap engaging members **202** extend unobstructed below the back plate or circuit board **204**. The travel of the key below the back plate may be eliminated from the overall stowed keyboard thickness by popping up the keyboard or otherwise extending the keyboard to a deployed position having sufficient thickness to accommodate the travel of the engaging members **212** below the base **204**.
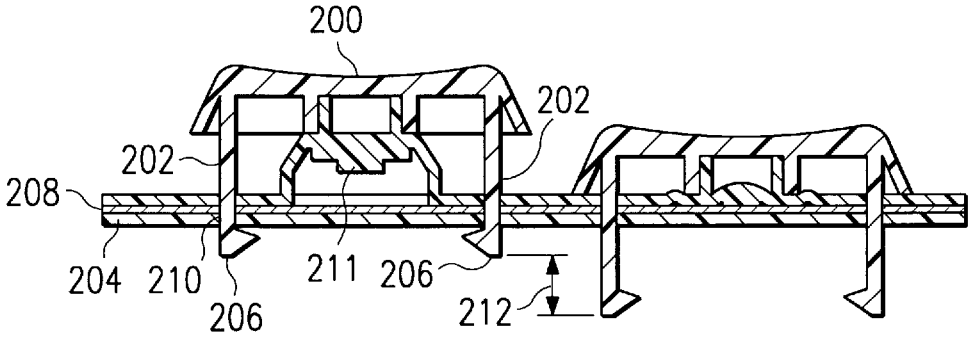
15 Claims, 3 Drawing Sheets