(No Model.)

T. T. SMITH.

ELECTRIC CIRCUIT CONNECTION.

No. 311,616. Patented Feb. 3, 1885.

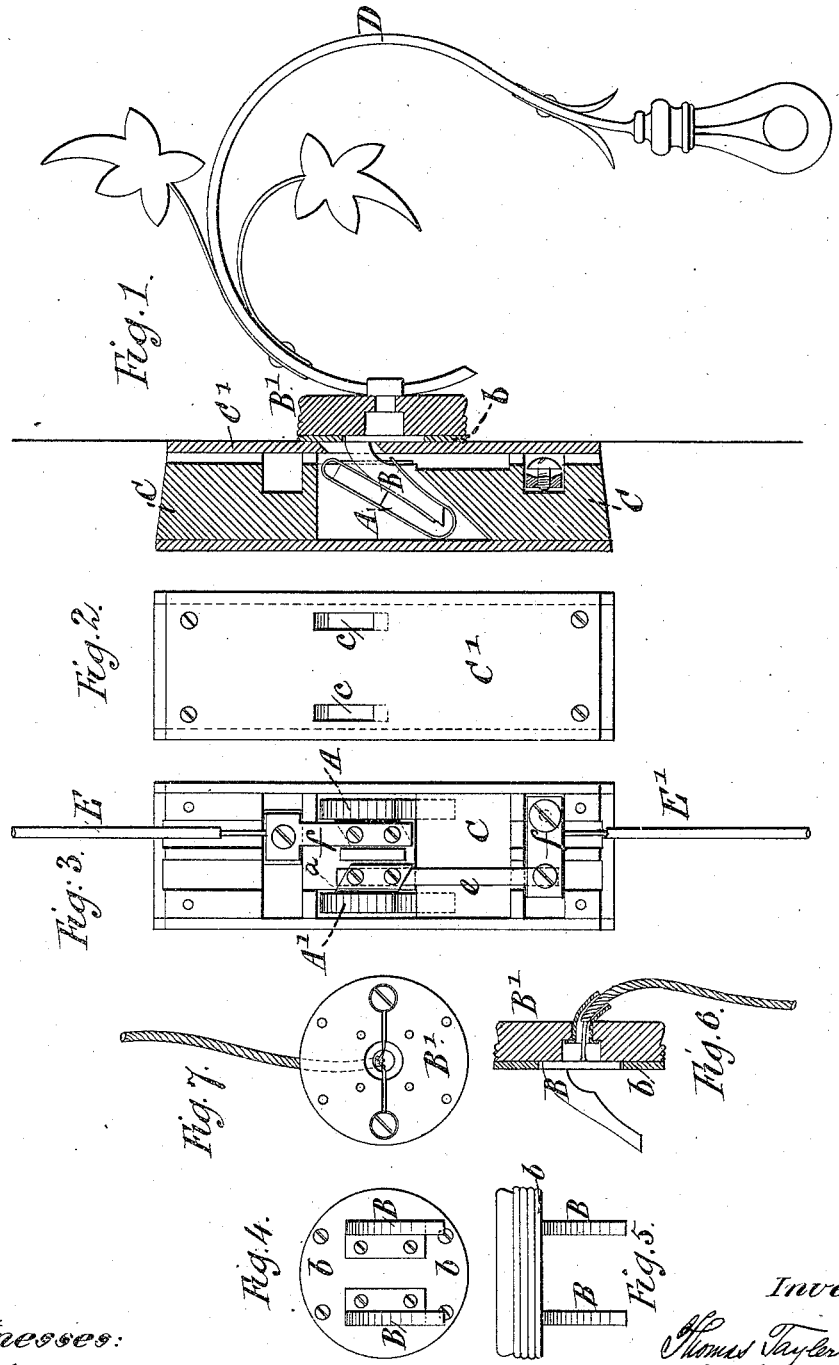

Witnesses:
C. L. Sundgren
Geo. Wagner

Inventor:
Thomas Tayler Smith
by his attorneys
Brown & Hall

N. PETERS. Photo-Lithographer, Washington, D. C.