US009411116B2

(12) **United States Patent**
Weimann

(10) **Patent No.: US 9,411,116 B2**
(45) **Date of Patent: Aug. 9, 2016**

(54) **CHEMICAL COMPOSITION OF FILLER RODS FOR USE IN OPTICAL FIBER CABLES**

(71) Applicant: **OFS Fitel, LLC**, Norcross, GA (US)

(72) Inventor: **Peter A Weimann**, Atlanta, GA (US)

(73) Assignee: **OFS FITEL, LLC**, Norcross, GA (US)

(*) Notice: Subject to any disclaimer, the term of this patent is extended or adjusted under 35 U.S.C. 154(b) by 325 days.

(21) Appl. No.: **14/011,292**

(22) Filed: **Aug. 27, 2013**

(65) **Prior Publication Data**

US 2014/0064683 A1 Mar. 6, 2014

Related U.S. Application Data

(60) Provisional application No. 61/694,433, filed on Aug. 29, 2012, provisional application No. 61/790,683, filed on Mar. 15, 2013.

(51) **Int. Cl.**
G02B 6/44 (2006.01)

(52) **U.S. Cl.**
CPC ***G02B 6/4436*** (2013.01); ***G02B 6/441*** (2013.01); *G02B 6/4479* (2013.01); *G02B 6/4483* (2013.01)

(58) **Field of Classification Search**
CPC G02B 6/441; G02B 6/4429; G02B 6/4436
See application file for complete search history.

(56) **References Cited**

U.S. PATENT DOCUMENTS

5,808,239	A *	9/1998	Olsson	H01B 7/1895 174/113 C
6,066,397	A	5/2000	Risch et al.	
6,210,802	B1	4/2001	Risch et al.	
6,411,403	B1 *	6/2002	Siddhamalli	G02B 6/443 385/109
7,272,282	B1 *	9/2007	Seddon	G02B 6/4475 385/100
8,041,167	B2 *	10/2011	Overton	C03C 25/106 385/100
2006/0045439	A1 *	3/2006	Brown	G02B 6/443 385/100
2009/0003780	A1 *	1/2009	Bringuier	G02B 6/4494 385/113

OTHER PUBLICATIONS

Introduction to Polypropylene, Equistar Technical Tip tech.topic.

* cited by examiner

Primary Examiner — Daniel Petkovsek

(57) **ABSTRACT**

The present disclosure provides optical fiber cable having one or more filler rods. The filler rods have higher melting temperature than conventional filler rods. For some embodiments, the filler rods are made from a blend of polyethylene and polypropylene.
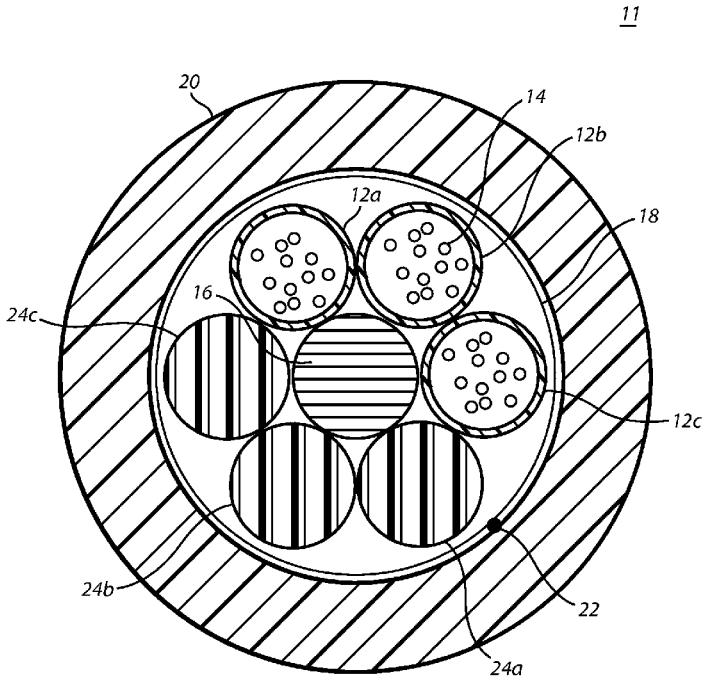
12 Claims, 2 Drawing Sheets