US009510716B2

(12) **United States Patent**
Sang et al.

(10) **Patent No.: US 9,510,716 B2**
(45) **Date of Patent: *Dec. 6, 2016**

(54) **VACUUM CLEANER HAVING DETACHABLE BLOWER AND RELATED LOCKING ASSEMBLY**

(71) Applicant: **Suzhou Cleva Electric Appliance Co., Ltd.**, Suzhou (CN)

(72) Inventors: **Shuhua Sang**, Suzhou (CN); **Juan Wei**, Suzhou (CN)

(73) Assignee: **Suzhou Cleva Electric Appliance Co., Ltd.** (CN)

(*) Notice: Subject to any disclaimer, the term of this patent is extended or adjusted under 35 U.S.C. 154(b) by 587 days.

This patent is subject to a terminal disclaimer.

(21) Appl. No.: **14/088,910**

(22) Filed: **Nov. 25, 2013**

(65) **Prior Publication Data**

US 2014/0075711 A1 Mar. 20, 2014

Related U.S. Application Data

(63) Continuation of application No. 12/466,876, filed on May 15, 2009, now Pat. No. 8,590,099.

(30) **Foreign Application Priority Data**

May 15, 2008 (CN) ..... 2008 2 0116314 U
May 16, 2008 (CN) ..... 2008 2 0111712 U

(51) **Int. Cl.**

A47L 5/00	(2006.01)
A47L 9/00	(2006.01)
A47L 5/36	(2006.01)
A47L 9/22	(2006.01)

(52) **U.S. Cl.**
CPC . ***A47L 5/365*** (2013.01); ***A47L 9/22*** (2013.01)

(58) **Field of Classification Search**
CPC A47L 5/365; A47L 9/22
USPC 15/327.1, 328, 330
See application file for complete search history.

(56) **References Cited**

U.S. PATENT DOCUMENTS

4,797,072	A	1/1989	Berfield et al.	
4,836,753	A	6/1989	Berfield et al.	
4,880,364	A *	11/1989	Berfield	A47L 5/14 417/360
5,404,614	A	4/1995	Stephens	
5,611,107	A *	3/1997	Tomasiak	A47L 5/365 15/327.2
5,660,493	A	8/1997	Stephens	
6,101,669	A *	8/2000	Martin	A47L 5/24 15/327.2
6,158,083	A *	12/2000	Holsten	A47L 5/365 15/326
6,530,116	B2	3/2003	Berfield et al.	
6,640,384	B2 *	11/2003	Sanders	A47L 5/14 15/330
8,015,661	B2	9/2011	Baer et al.	
8,590,099	B2	11/2013	Sang et al.	
2002/0108205	A1	8/2002	Berfield et al.	

(Continued)

Primary Examiner — Bryan R Muller
(74) *Attorney, Agent, or Firm* — JK Intellectual Property Law, PA

(57) **ABSTRACT**

A vacuum cleaner includes a dirt tank, a tank cover mounted on the dirt tank, and a blower detachably mounted on the tank cover. The blower includes a handle. A latching mechanism located at the handle allows selective attachment or detachment of the blower and the tank cover.
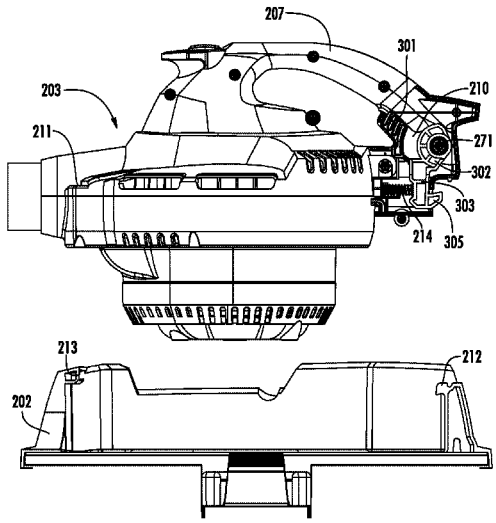
12 Claims, 14 Drawing Sheets