US009410716B2

(12) **United States Patent**
Ryu

(10) **Patent No.: US 9,410,716 B2**
(45) **Date of Patent: Aug. 9, 2016**

(54) **VENTILATION APPARATUS**

(75) Inventor: **Jeongtae Ryu**, Changwon-si (KR)

(73) Assignee: **LG ELECTRONICS INC.**, Seoul (KR)

(*) Notice: Subject to any disclaimer, the term of this patent is extended or adjusted under 35 U.S.C. 154(b) by 812 days.

(21) Appl. No.: **13/602,560**

(22) Filed: **Sep. 4, 2012**

(65) **Prior Publication Data**

US 2013/0059523 A1 Mar. 7, 2013
US 2016/0195298 A9 Jul. 7, 2016

Related U.S. Application Data

(63) Continuation-in-part of application No. 13/597,476, filed on Aug. 29, 2012, now abandoned.

(30) **Foreign Application Priority Data**

Sep. 1, 2011 (KR) 10-2011-0088645
Sep. 14, 2011 (KR) 10-2011-0092643

(51) **Int. Cl.**

F24F 7/06 (2006.01)
F24F 7/007 (2006.01)
F24F 13/20 (2006.01)
F24F 1/00 (2011.01)

(52) **U.S. Cl.**

CPC ***F24F 13/20*** (2013.01); ***F24F 1/0007*** (2013.01); *F24F 1/0033* (2013.01); *F24F 2001/004* (2013.01)

(58) **Field of Classification Search**

CPC F24F 12/006
See application file for complete search history.

(56) **References Cited**

U.S. PATENT DOCUMENTS

2,331,691 A * 10/1943 Hubbard F24F 1/0007 165/124
4,711,293 A * 12/1987 Niwa F24F 12/001 165/10
4,787,210 A * 11/1988 Brown 62/89
5,125,239 A * 6/1992 Kobayashi et al. 62/262
5,632,334 A * 5/1997 Grinbergs F24F 12/006 165/232

(Continued)

FOREIGN PATENT DOCUMENTS

JP 10-318578 A 12/1998
KR 10-0684257 B1 2/2007

(Continued)

OTHER PUBLICATIONS

Korean Notice of Allowance dated Oct. 16, 2012 issued in Application No. 10-2011-0088645.

Primary Examiner — Steven B McAllister
Assistant Examiner — Jonathan Cotov
(74) *Attorney, Agent, or Firm* — Ked & Associates LLP

(57) **ABSTRACT**

A ventilation apparatus is provided. The ventilation apparatus may include a base, frames positioned on the base, a rear panel positioned behind the frames and having an interior air discharge port and exterior air suction port formed therein, a top cover positioned on top of the frame and having exterior air discharge port formed therein, and a front panel positioned in front of the frames and having an interior air discharge port formed therein. Heat exchangers disposed in the frames may include interior and exterior air passages. An exhaust fan and air supply fans provide for air flow through the apparatus, guide by the frames. Use of the frames to guide air flow simplify structures and may enhance efficiency by simplifying the passages of the exterior and interior air through the apparatus.
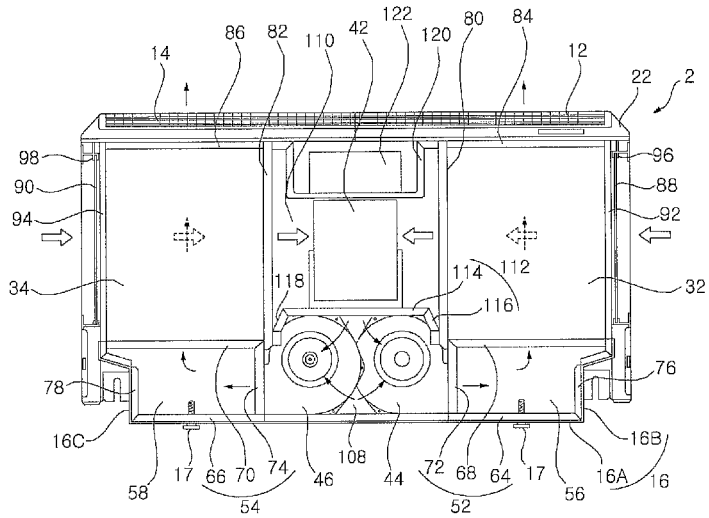
20 Claims, 9 Drawing Sheets