US009410316B2

(12) **United States Patent**
Reigstad

(10) **Patent No.: US 9,410,316 B2**
(45) **Date of Patent: Aug. 9, 2016**

(54) **POST-TENSION CONCRETE LEAVE OUT SPLICING SYSTEM AND METHOD**

(71) Applicant: **REIGSTAD & ASSOCIATES, INC.**, Saint Paul, MN (US)

(72) Inventor: **Gordon H. Reigstad**, Saint Paul, MN (US)

(73) Assignee: **Reigstad & Associates, Inc.**, Saint Paul, MN (US)

(*) Notice: Subject to any disclaimer, the term of this patent is extended or adjusted under 35 U.S.C. 154(b) by 0 days.

(21) Appl. No.: **14/581,720**

(22) Filed: **Dec. 23, 2014**

(65) **Prior Publication Data**

US 2015/0176278 A1 Jun. 25, 2015

Related U.S. Application Data

(60) Provisional application No. 61/920,581, filed on Dec. 24, 2013.

(51) **Int. Cl.**

E04B 5/32	(2006.01)
E04C 5/06	(2006.01)
E04B 5/02	(2006.01)
E04B 5/04	(2006.01)
E04B 5/17	(2006.01)

(52) **U.S. Cl.**

CPC . ***E04B 5/32*** (2013.01); ***E04B 5/023*** (2013.01); ***E04B 5/04*** (2013.01); ***E04C 5/0645*** (2013.01); *E04B 2005/176* (2013.01); *E04B 2005/324* (2013.01)

(58) **Field of Classification Search**

CPC E04C 5/162; E04C 5/163; E04C 5/165; E04C 5/168; E04C 5/0645; E04B 1/06; E04B 1/043; E04B 1/22; E04B 5/023; E04B 5/32; E04B 2005/324; E04B 2103/02; E04B 5/04

USPC 52/223.6, 223.7, 583.1, 742.14, 742.16, 52/223.8, 223.9, 223.11, 223.13, 223.14

See application file for complete search history.

(56) **References Cited**

U.S. PATENT DOCUMENTS

2,181,623	A	11/1939	Klein	
2,611,262	A *	9/1952	Dodson et al.	52/223.13
3,089,215	A *	5/1963	Stubbs	E01C 11/20 254/29 A
3,295,286	A *	1/1967	Schaich	52/583.1
3,369,334	A	2/1968	Berg	
3,478,481	A *	11/1969	Schuppisser et al.	52/432
3,555,753	A	1/1971	Magadini	
3,691,708	A *	9/1972	Firnkas	52/470
3,782,061	A *	1/1974	Minutoli et al.	52/125.5
3,869,530	A *	3/1975	Williams	264/33
3,952,468	A	4/1976	Sourn	
4,024,688	A *	5/1977	Calini	52/378
4,099,360	A *	7/1978	Outram	52/745.18
4,324,081	A *	4/1982	Chicha	52/432
4,627,203	A *	12/1986	Presswalla	E04B 5/32 174/96

(Continued)

Primary Examiner — Joshua J Michener
Assistant Examiner — Theodore Adamos
(74) *Attorney, Agent, or Firm* — Hamre, Schumann, Mueller & Larson, P.C.

(57) **ABSTRACT**

Devices, systems, and methods for constructing post-tensioned concrete slabs in a new floor construction that has a reduced gap distance between the slabs. The devices, systems, and methods can improve project construction time by reducing the time delay in accessing the floor underneath the slabs due to safety and/or weather conditions.
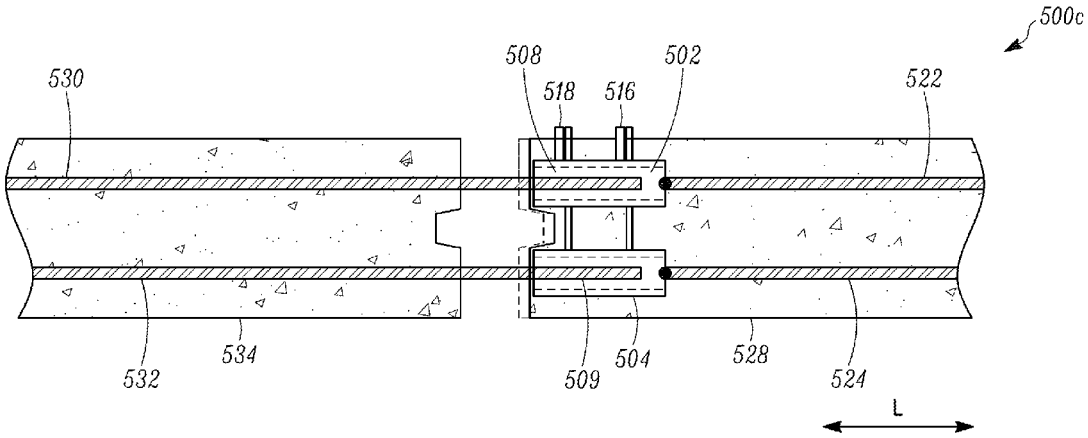
20 Claims, 19 Drawing Sheets