US009409716B2

(12) **United States Patent**
Bastian, II et al.

(10) **Patent No.: US 9,409,716 B2**
(45) **Date of Patent: Aug. 9, 2016**

(54) **CROSS BELT SLAT SORTER**

(71) Applicant: **Bastian Solutions, LLC**, Indianapolis, IN (US)

(72) Inventors: **William A. Bastian, II**, Carmel, IN (US); **Garrett Clark**, Carmel, IN (US); **Eric C. Halvorson, II**, Fishers, IN (US)

(73) Assignee: **BASTIAN SOLUTIONS, LLC**, Indianapolis, IN (US)

(*) Notice: Subject to any disclaimer, the term of this patent is extended or adjusted under 35 U.S.C. 154(b) by 0 days.

(21) Appl. No.: **14/304,010**

(22) Filed: **Jun. 13, 2014**

(65) **Prior Publication Data**

US 2015/0360869 A1 Dec. 17, 2015

(51) **Int. Cl.**

B65G 47/46	(2006.01)
B65G 17/34	(2006.01)
B65G 47/244	(2006.01)
B65G 43/08	(2006.01)

(52) **U.S. Cl.**
CPC ***B65G 17/345*** (2013.01); ***B65G 43/08*** (2013.01); ***B65G 47/2445*** (2013.01)

(58) **Field of Classification Search**
CPC B65G 17/345; B65G 15/30; B65G 15/50
USPC 198/370.06, 371.2
See application file for complete search history.

(56) **References Cited**

U.S. PATENT DOCUMENTS

3,231,068	A *	1/1966	Harrison	B07C 3/082 198/370.06
4,096,936	A *	6/1978	Nielsen	B65G 17/067 198/370.06
5,813,515	A *	9/1998	Gennari	B07C 3/06 198/370.05
6,220,561	B1 *	4/2001	Garcia	G02B 26/0841 248/487
6,273,268	B1 *	8/2001	Axmann	B65G 17/345 198/370.06
6,446,782	B1 *	9/2002	Patrick	B65G 47/71 198/370.06
6,669,001	B1 *	12/2003	Bromley	B65G 17/345 198/370.02
7,086,519	B2	8/2006	Veit et al.	
7,431,140	B2	10/2008	Tarlton	
7,467,704	B2	12/2008	Vertogen et al.	
7,497,316	B2	3/2009	Hysell et al.	
7,518,513	B2	4/2009	Liu	
7,559,282	B2	7/2009	Austin	
7,562,760	B2	7/2009	Affaticati et al.	
7,562,761	B2	7/2009	Tasma et al.	
7,725,213	B2	5/2010	Hysell et al.	
7,773,214	B2	8/2010	Sones et al.	
8,100,058	B2	1/2012	Austin	

(Continued)

OTHER PUBLICATIONS

Beumer Group Crisplant LS-4000—The Green High-Capacity Sortation System. 2 pages. [retrieved May 16, 2014]. Retrieved from the Internet: <URL: http://www.beumergroup.com/uploads/tx_bbbrochures/Sustainability_DB_LS4000_EN_06.PDF>.

(Continued)

Primary Examiner — James R Bidwell
(74) *Attorney, Agent, or Firm* — Woodard Emhardt Moriarty McNett and Henry LLP

(57) **ABSTRACT**

A conveyor sortation system includes a frame and two or more carriages riding along the frame in a travel direction. Each carriage includes a belt and an electric motor. The belt is oriented at a direction that is transverse to the travel direction of the carriage. The electric motor is configured to drive the belt. In one form, the belt has a width that is at most 8 inches (20.32 cm) wide. In another form, the carriages have a vertical recirculation pattern along the frame.
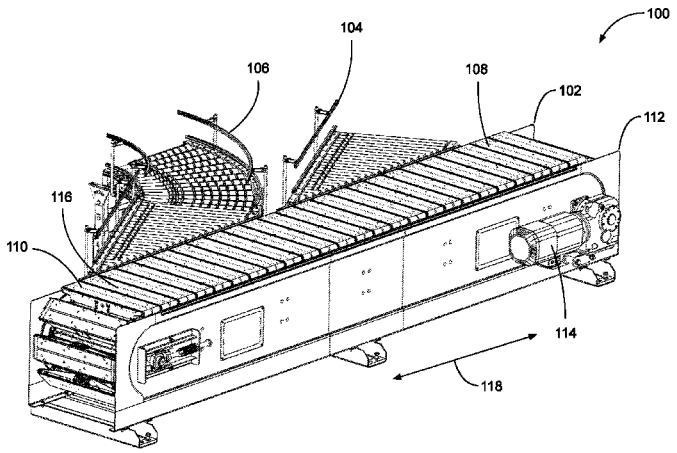
43 Claims, 22 Drawing Sheets