FIG. 1

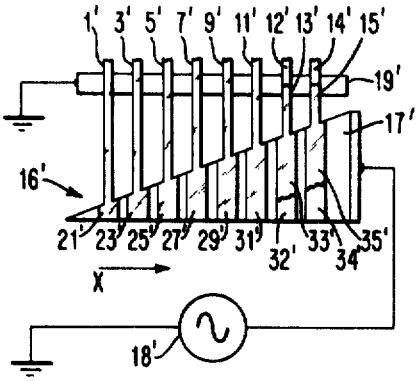

FIG. 3

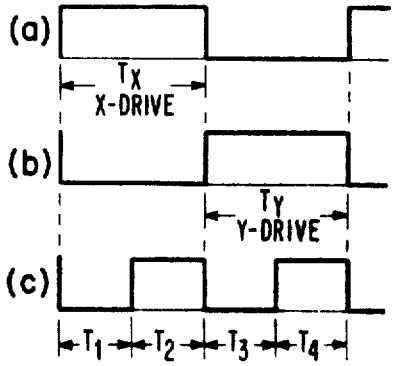

FIG. 2

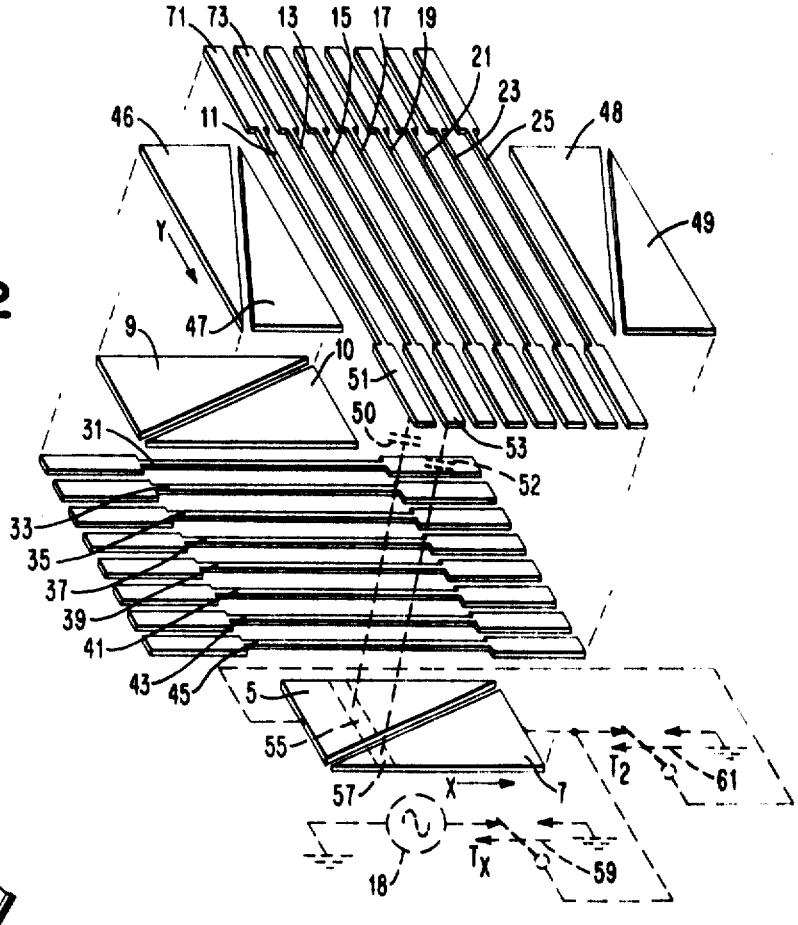

FIG. 4

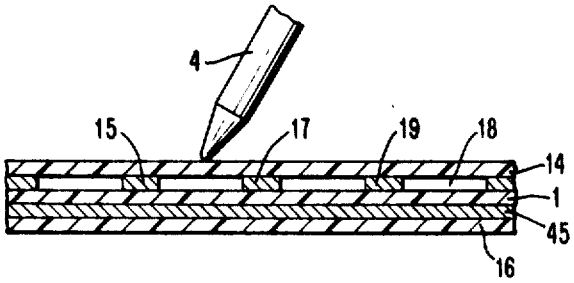

INVENTORS
HERBERT DYM
ROBERT V. MAZZA

BY John A. Jordan
ATTORNEY