FIG.1

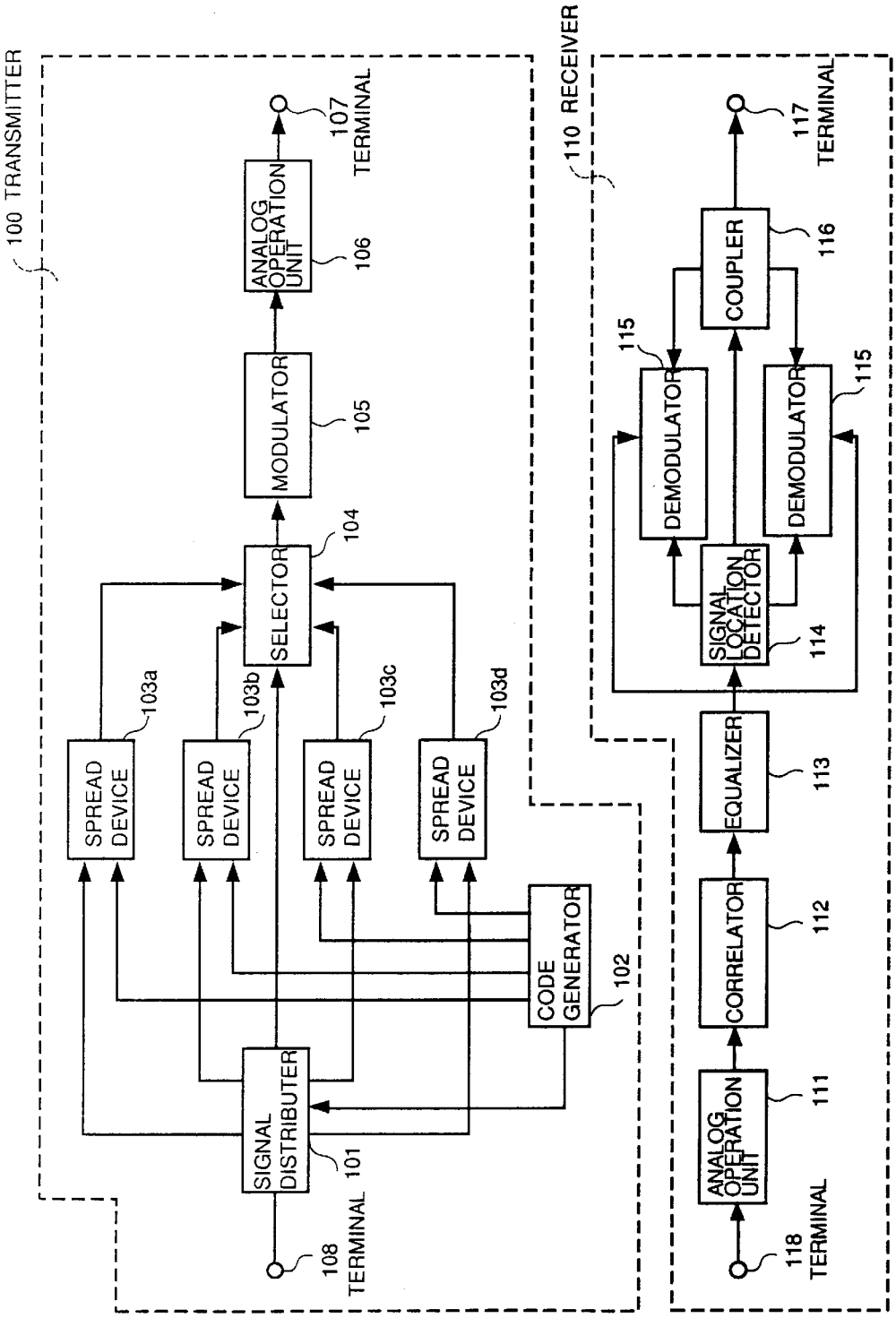
100 TRANSMITTER
110 RECEIVER
SIGNAL DISTRIBUTER
101
CODE GENERATOR
102
SPREAD DEVICE
103a
SPREAD DEVICE
103b
SPREAD DEVICE
103c
SPREAD DEVICE
103d
SELECTOR
104
MODULATOR
105
ANALOG OPERATION UNIT
106
107 TERMINAL
108 TERMINAL
ANALOG OPERATION UNIT
111
CORRELATOR
112
EQUALIZER
113
SIGNAL LOCATION DETECTOR
114
DEMODULATOR
115
DEMODULATOR
115
COUPLER
116
117 TERMINAL
118 TERMINAL