US005987015A

# United States Patent [19]

**Matui**

[11] **Patent Number: 5,987,015**

[45] **Date of Patent: *Nov. 16, 1999**

[54] **CODE DIVISION MULTIPLEXING COMMUNICATION SYSTEM AND METHOD**

[75] Inventor: **Hitosi Matui**, Tokyo, Japan

[73] Assignee: **NEC Corporation**, Japan

[ * ] Notice: This patent is subject to a terminal disclaimer.

[21] Appl. No.: **08/724,772**

[22] Filed: **Oct. 3, 1996**

[30] **Foreign Application Priority Data**

Oct. 6, 1995 [JP] Japan ..... 7-259885

[51] **Int. Cl.**[6] ..... **H04J 13/00**

[52] **U.S. Cl.** ..... **370/335**; 370/342

[58] **Field of Search** ..... 370/320, 328, 370/329, 335, 342, 441, 479; 375/200, 206, 208, 209, 210, 295, 316, 229, 230, 232

[56] **References Cited**

U.S. PATENT DOCUMENTS

| | | | |
|---|---|---|---|
| 5,077,753 | 12/1991 | Grau, Jr. et al. | 375/200 |
| 5,144,641 | 9/1992 | Akazawa et al. | 375/208 |
| 5,164,959 | 11/1992 | Cai et al. | 375/200 |
| 5,291,515 | 3/1994 | Uchida et al. | 375/200 |
| 5,583,884 | 12/1996 | Maruyama et al. | 375/207 |
| 5,671,248 | 9/1997 | Chau et al. | 375/208 |

OTHER PUBLICATIONS

M. Fukushi, et al., "Small–Size, High Data Rate Wireless LAN Modem Using Multi Code Direct Sequence (MCDS) Spread Sprectrum", The Institute of Electronics, Information and Communication Engineers, Technical Report of IEICE, RCS94–63 (1994–09), pp. 25–30.

*Primary Examiner*—Chi H. Pham
*Assistant Examiner*—Kwang B. Yao
*Attorney, Agent, or Firm*—Ostrolenk. Faber, Gerb & Soffen, LLP

[57] **ABSTRACT**

A transmitter **100** comprises a signal distributor **101** for outputting a modulation signal and a selection signal, a code generator **102** for generating a spread code, spread devices **103***a* to **103***d* for multiplying the spread code by the modulation signal and a selector **104** for selecting the modulation signal based on the selection signal. A receiver **110** comprises a correlator **112** for taking a correlation between the spread code multiplied by the reception signal and the spread code at a timing of the code generator **102**, an equalizer **113** for removing a delay from the signal based on the correlation result, a signal location detector **114** for detecting the location of the signal output by the equalizer **113**, a demodulator **115** for demodulating the signal output by the equalizer **113** and a coupler **116** for coupling the signal location information detected by the signal location detector **114** with the signal output by the demodulator **115**.
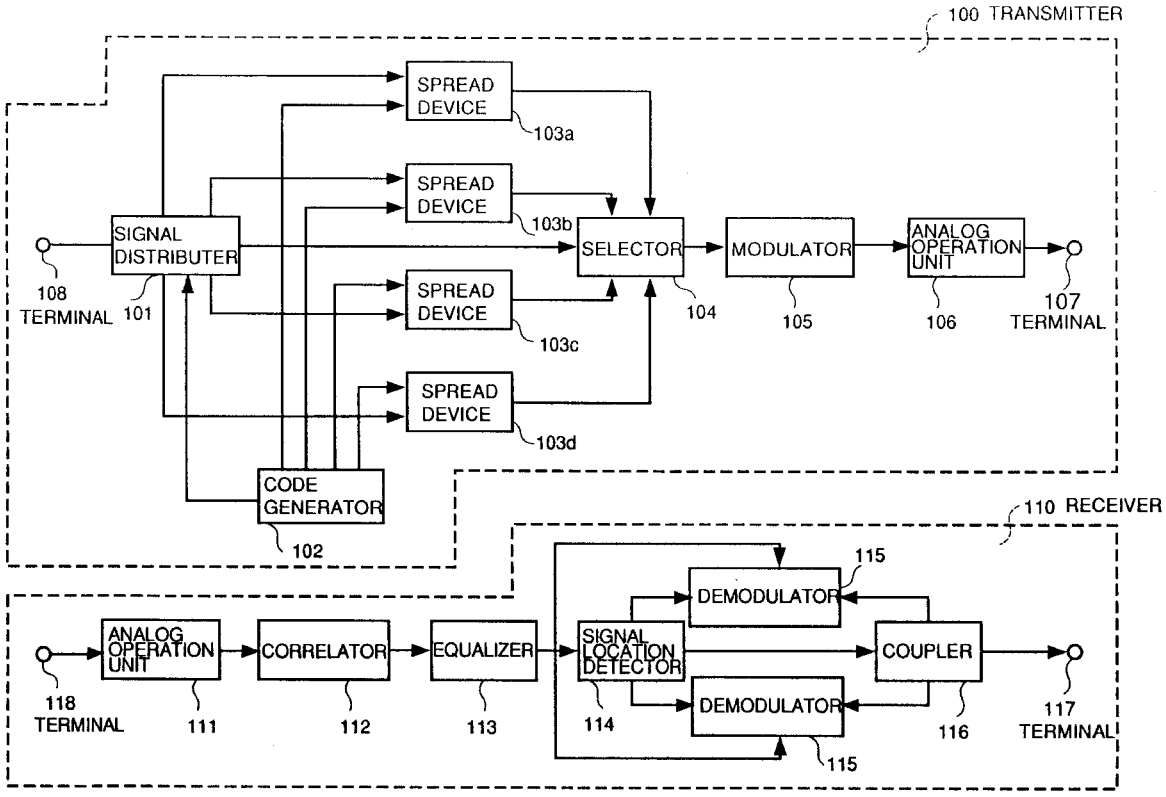
**9 Claims, 13 Drawing Sheets**