US005181015A

United States Patent [19]

Marshall et al.

[11] Patent Number: 5,181,015

[45] Date of Patent: Jan. 19, 1993

[54] METHOD AND APPARATUS FOR CALIBRATING AN OPTICAL COMPUTER INPUT SYSTEM

[75] Inventors: **Roger N. Marshall**, Solana Beach; **Lane T. Hauck**, San Diego; **Leonid Shapiro**, Lakeside; **Jeffrey W. Busch**, San Diego; **Eric S. Stevens**, El Cajon, all of Calif.

[73] Assignee: **Proxima Corporation**, San Diego, Calif.

[21] Appl. No.: **611,416**

[22] Filed: **Nov. 9, 1990**

Related U.S. Application Data

[63] Continuation-in-part of Ser. No. 433,029, Nov. 7, 1989, abandoned.

[51] **Int. Cl.**[5] **G09G 3/02**

[52] **U.S. Cl.** **340/706**; 340/707; 356/365

[58] **Field of Search** 340/707, 709, 706, 705, 340/762, 782; 358/107, 93, 213.13; 434/323, 324, 325, 337; 356/375; 353/122, 28, 43

[56] **References Cited**

U.S. PATENT DOCUMENTS

3,855,096	5/1975	Inuiya	340/709
4,280,135	7/1981	Schlossberg	358/93
4,576,481	3/1986	Hansen	356/375
4,724,480	2/1988	Hecker et al.	356/375
4,794,430	12/1988	Whittaker et al.	340/782
4,808,980	2/1989	Drumm	340/707
4,836,671	6/1989	Bantista	356/375
4,846,694	7/1989	Erhardt	340/707

Primary Examiner—Alvin E. Oberley
Assistant Examiner—Xiao M. Wu
Attorney, Agent, or Firm—Bernard L. Kleinke; William Patrick Waters; Jerry R. Potts

[57] **ABSTRACT**

A method and apparatus facilitates the alignment and light sensitivity adjustment of an optical computer input system, which includes a user generated light directed onto a screen bearing a computer generated image, to convey information to the computer interactively by the user, even in a darkened room. The system discriminates between the user generated image, and the computer generated image. Devices facilitate the proper alignment of the system with the screen, as well as proper light sensitivity adjustments.
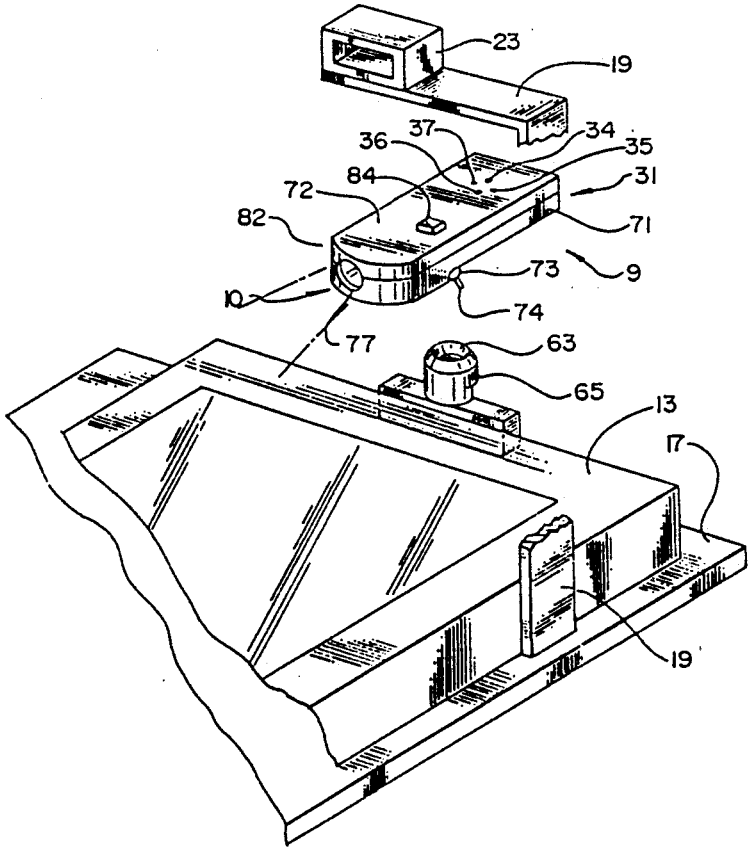
32 Claims, 12 Drawing Sheets