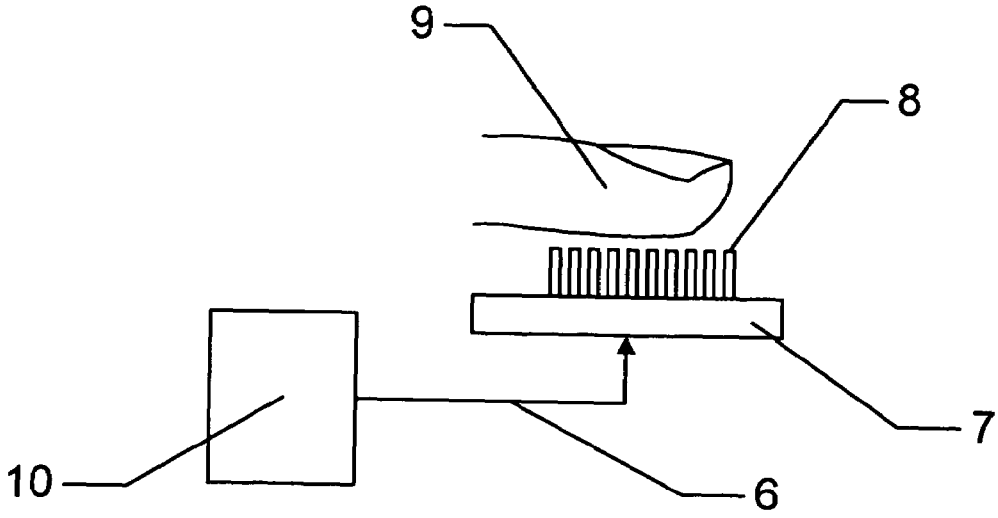

Figure 3

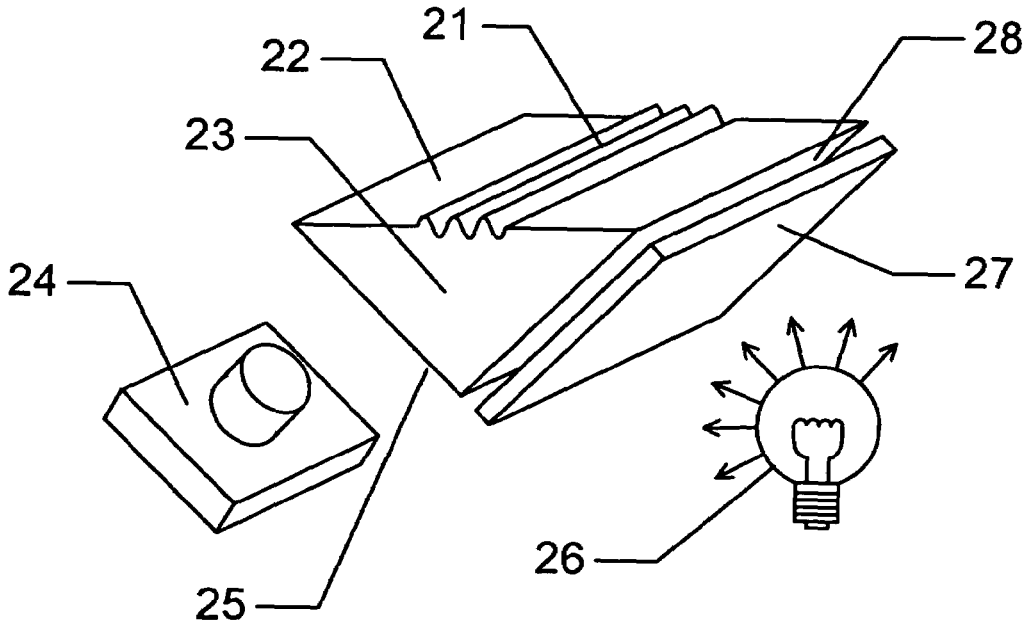

Figure 4