US006867415B2

(12) **United States Patent**
Hughey et al.

(10) **Patent No.: US 6,867,415 B2**
(45) **Date of Patent: Mar. 15, 2005**

(54) **SAMPLE INTRODUCTION INTERFACE FOR ANALYTICAL PROCESSING**

(75) Inventors: **Barbara J. Hughey**, Lexington, MA (US); **Paul L. Skipper**, Belmont, MA (US); **John S. Wishnok**, Boston, MA (US); **Ruth E. Shefer**, Newton, MA (US); **Naomi A. Fried**, Oakland, CA (US); **John T. Mehl**, Westfield, NJ (US); **Steven R. Tannenbaum**, Framingham, MA (US)

(73) Assignees: **Newton Scientific, Inc.**, Cambridge, MA (US); **Massachusetts Institute of Technology**, Cambridge, MA (US)

(*) Notice: Subject to any disclaimer, the term of this patent is extended or adjusted under 35 U.S.C. 154(b) by 0 days.

(21) Appl. No.: **09/938,277**

(22) Filed: **Aug. 23, 2001**

(65) **Prior Publication Data**

US 2002/0060288 A1 May 23, 2002

Related U.S. Application Data

(63) Continuation-in-part of application No. 09/648,053, filed on Aug. 25, 2000, now abandoned.

(60) Provisional application No. 60/227,839, filed on Aug. 25, 2000, and provisional application No. 60/227,711, filed on Aug. 24, 2000.

(51) **Int. Cl.**[7] **H01J 49/26**

(52) **U.S. Cl.** ..... **250/288**; 250/288 A; 250/282; 250/423 R; 73/23.1

(58) **Field of Search** ..... 250/288, 288 A, 250/423 R, 388, 282; 73/23.1

(56) **References Cited**

U.S. PATENT DOCUMENTS

4,012,301 A		3/1977	Rich et al.	204/157
4,209,696 A		6/1980	Fite	250/281
4,666,678 A		5/1987	Lemelson	422/186
4,702,808 A		10/1987	Lemelson	204/157
4,977,320 A		12/1990	Chowdhury et al.	250/288
4,988,879 A	*	1/1991	Zare et al.	250/423 P
5,209,919 A		5/1993	Turtletaub et al.	424/1.1
5,376,355 A		12/1994	Turtletaub et al.	424/1.1
5,438,194 A	*	8/1995	Koudijs et al.	250/288
5,917,185 A		6/1999	Yeung et al.	250/288
5,959,297 A		9/1999	Weinberg et al.	250/288
6,031,228 A		2/2000	Abramson	250/288
6,342,393 B1	*	1/2002	Hofstadler et al.	250/288
6,451,616 B1		9/2002	Odom et al.	436/173
6,455,844 B1	*	9/2002	Meyer	250/281

OTHER PUBLICATIONS

Freeman et al., "The design of a radiocarbon microprobe for tracer mapping in biological specimens", Nuclear Instruments and Methods in Physics Research B52, 1990, 405–409.

Lichtfouse, "Compound–specific isotope analysis. Application to archaelogy, biomedical sciences, biosynthesis, environment, extraterrestrial chemistry, food science, forensic science, humic substances, microbiology, organic geochemistry, soil science and sport", John Wiley & Sons, 2000.

Brand, "High precision isotope ratio monitoring techniques in mass spectrometry", John Wiley & Sons, 1996, 1076–5174.

* cited by examiner

Primary Examiner—John R. Lee
Assistant Examiner—Zia R. Hashmi
(74) *Attorney, Agent, or Firm*—Gauthier & Connors LLP

(57) **ABSTRACT**

An interface for introducing a non-gaseous sample as a predetermined gaseous form into an accelerator mass spectrometer which comprises a nebulizer that receives the non-gaseous sample to provide a fine spray of the sample, a converter that receives at least a portion of said fine spray and converts the desired elements to the predetermined gaseous form and a flow line that transports the predetermined gaseous form to the accelerator mass spectrometer.
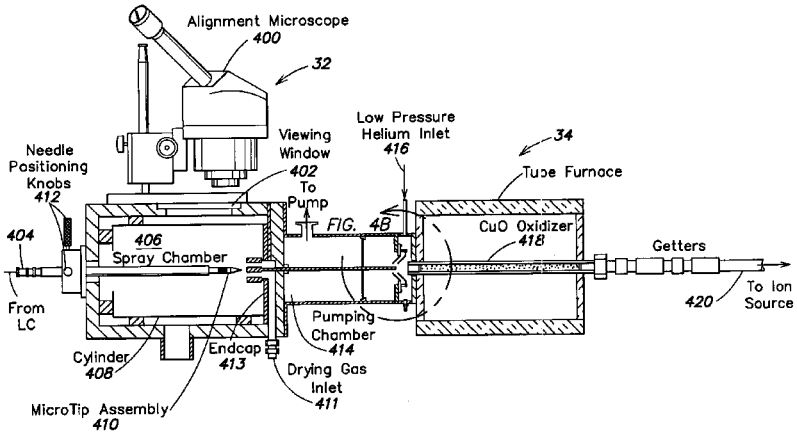
44 Claims, 16 Drawing Sheets