US007567315B2

(12) **United States Patent**
Chung

(10) **Patent No.: US 7,567,315 B2**
(45) **Date of Patent: Jul. 28, 2009**

(54) **LIQUID CRYSTAL DISPLAY MODULE INCLUDING HOOK ASSEMBLY**

(75) Inventor: **Young-Suk Chung**, Gumi-si (KR)

(73) Assignee: **LG. Display Co., Ltd.**, Seoul (KR)

(*) Notice: Subject to any disclaimer, the term of this patent is extended or adjusted under 35 U.S.C. 154(b) by 602 days.

(21) Appl. No.: **11/300,251**

(22) Filed: **Dec. 14, 2005**

(65) **Prior Publication Data**

US 2006/0209226 A1 Sep. 21, 2006

(30) **Foreign Application Priority Data**

Mar. 16, 2005 (KR) 10-2005-0021652

(51) **Int. Cl.**
G02F 1/1333 (2006.01)

(52) **U.S. Cl.** **349/58**; 349/60

(58) **Field of Classification Search** 349/58–60
See application file for complete search history.

(56) **References Cited**

U.S. PATENT DOCUMENTS

6,971,780	B2 *	12/2005	Lee et al.	362/561
7,034,913	B2 *	4/2006	Ishida	349/150
2005/0200770	A1 *	9/2005	Kuo et al.	349/58
2006/0152664	A1 *	7/2006	Nishio et al.	349/150

* cited by examiner

Primary Examiner—Andrew Schechter
(74) *Attorney, Agent, or Firm*—Brinks Hofer Gilson & Lione

(57) **ABSTRACT**

A liquid crystal display device includes a liquid crystal display panel, a backlight unit under the liquid crystal display panel, a bottom frame under the backlight unit, a main frame surrounding portions of the liquid crystal display panel and the backlight unit, and a top frame covering top edge portions of the liquid crystal display panel. The top frame is connected to the main frame so that an inner side surface of the top frame is separated from an outer side surface of the main frame.
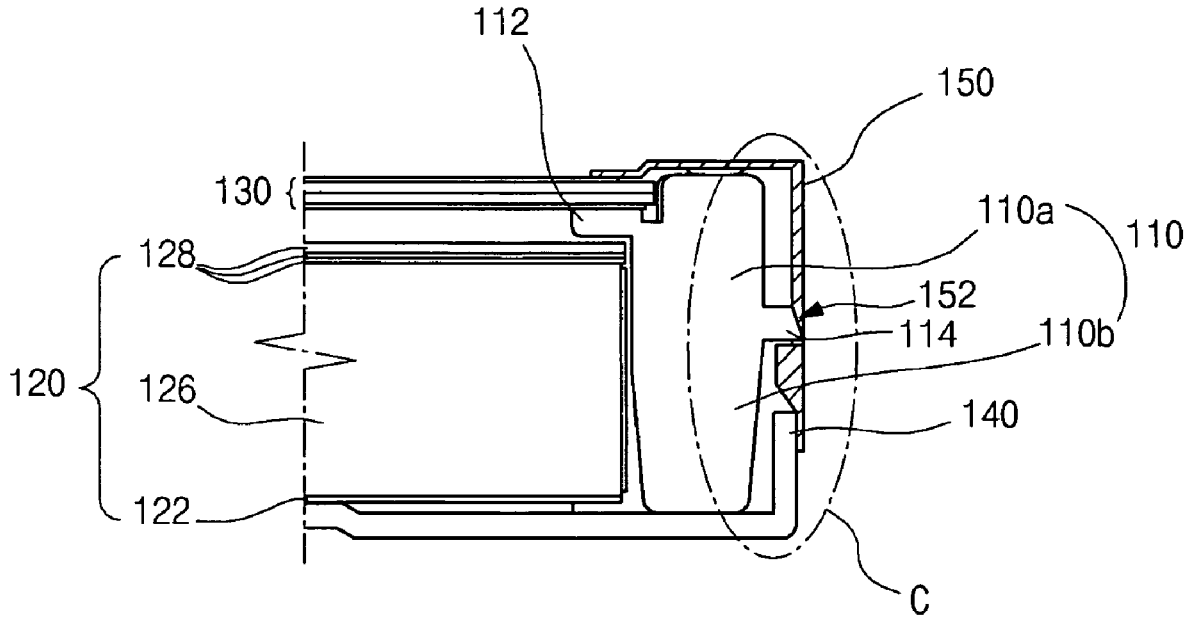
18 Claims, 2 Drawing Sheets