United States Patent [19]

Wilken et al.

[11] **4,063,815**

[45] **Dec. 20, 1977**

[54] **APPARATUS AND METHOD FOR OPTICAL TRACKING AND AIMING**

[75] Inventors: **Joachim Wilken**, Karlsruhe; **Karl-Heinz Wiemer; Harald Kauer**, both of Ettlingen, all of Germany

[73] Assignee: **Dr. -Ing. Ludwig Pietzsch**, Ettlingen, Germany

[21] Appl. No.: **669,173**

[22] Filed: **Mar. 22, 1976**

[30] **Foreign Application Priority Data**

Mar. 27, 1975 Germany 2513760

[51] **Int. Cl.**[2] **F41G 1/40**

[52] **U.S. Cl.** ..... **356/29**; 89/41 E; 350/24; 350/52; 350/302; 356/254

[58] **Field of Search** ..... 33/241, 246; 89/41 E, 89/36 K, 41 TV; 350/21, 22, 24, 48, 52, 301; 356/254, 255, 29

[56] **References Cited**

U.S. PATENT DOCUMENTS

2,276,270	3/1942	Gregory	89/41 E
2,281,772	5/1942	Klemperer	33/246
2,405,065	7/1946	Tear	89/41 E
3,505,465	4/1970	Rees	89/41 TV
3,602,088	8/1971	Spring	350/52
3,954,041	5/1976	Mechulam et al.	89/36 K

FOREIGN PATENT DOCUMENTS

448,250	6/1936	United Kingdom	89/41 E

OTHER PUBLICATIONS

Websters Third New International Dictionary, 1965, p. 1584.

Primary Examiner—Stephen C. Bentley
Attorney, Agent, or Firm—Burns, Doane, Swecker & Mathis

[57] **ABSTRACT**

The invention relates to an apparatus and method for optical tracking and aiming from a movable system, such as a vehicle. The apparatus may comprise a viewing device having a sighting mark moveable responsive to the position of an aiming mechanism control. The sighting mark may be superimposed on a field of vision observable in the viewing device, by stroboscopic illumination.
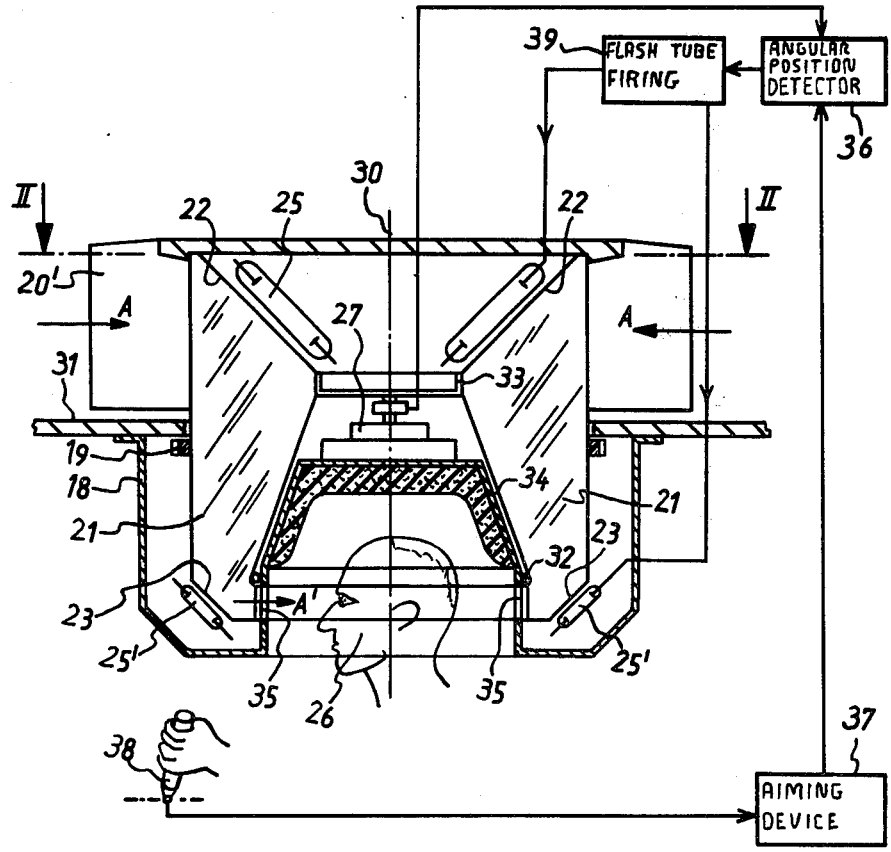
5 Claims, 3 Drawing Figures