US008163015B2

(12) **United States Patent**
Cumming

(10) **Patent No.: US 8,163,015 B2**
(45) **Date of Patent: *Apr. 24, 2012**

(54) **"W" ACCOMMODATING INTRAOCULAR LENS**

(75) Inventor: **J. Stuart Cumming**, Laguna Beach, CA (US)

(73) Assignee: **C&C Vision International Limited**, Dublin (IE)

(*) Notice: Subject to any disclaimer, the term of this patent is extended or adjusted under 35 U.S.C. 154(b) by 208 days.

This patent is subject to a terminal disclaimer.

(21) Appl. No.: **11/620,488**

(22) Filed: **Jan. 5, 2007**

(65) **Prior Publication Data**

US 2008/0319545 A1 Dec. 25, 2008

Related U.S. Application Data

(63) Continuation-in-part of application No. 11/459,862, filed on Jul. 25, 2006, now abandoned.

(51) **Int. Cl.**
A61F 2/16 (2006.01)

(52) **U.S. Cl.** **623/6.37**; 623/6.38; 623/6.4; 623/6.44; 623/6.46

(58) **Field of Classification Search** 623/6.37, 623/6.38, 6.4, 6.41, 6.43, 6.44, 6.46, 6.47, 623/6.56

See application file for complete search history.

(56) **References Cited**

U.S. PATENT DOCUMENTS

4,174,543	A	11/1979	Kelman
4,244,060	A	1/1981	Hoffer
4,254,509	A	3/1981	Tennant
4,254,510	A	3/1981	Tennant
4,298,996	A	11/1981	Barnet
4,304,012	A	12/1981	Richard
4,409,691	A	10/1983	Levy
4,424,597	A	1/1984	Schlegel
4,441,217	A	4/1984	Cozean, Jr.
4,477,931	A	10/1984	Kelman
4,573,998	A	3/1986	Mazzocco
4,585,457	A	4/1986	Kalb
4,605,411	A	8/1986	Fedorov et al.
4,629,462	A	12/1986	Feaster
4,664,666	A	5/1987	Barrett
4,673,406	A	6/1987	Schlegel
4,704,123	A	11/1987	Smith
4,718,904	A	1/1988	Thornton
4,738,680	A	4/1988	Herman
4,753,655	A	6/1988	Hecht
4,759,761	A	7/1988	Portnoy
4,778,463	A	10/1988	Hetland

(Continued)

FOREIGN PATENT DOCUMENTS

EP 0208546 A 1/1987

(Continued)

OTHER PUBLICATIONS

Archimede Busacca, Ciliary Muscle Physiology Studied by Gonioscopy, Annals of Oculistics, vol. CLXXXVIII, Jan. 1955.

(Continued)

Primary Examiner — David H Willse
Assistant Examiner — Javier Blanco
(74) *Attorney, Agent, or Firm* — Orrick, Herrington & Sutcliffe, LLP

(57) **ABSTRACT**

An accommodating intraocular lens comprising a flexible body, a flexible optic which is moveable anteriorly and posteriorly relative to the lens body, and hinged portions longitudinally connecting the optic to the body. The body may have extending centration and fixation loops on its distal ends.
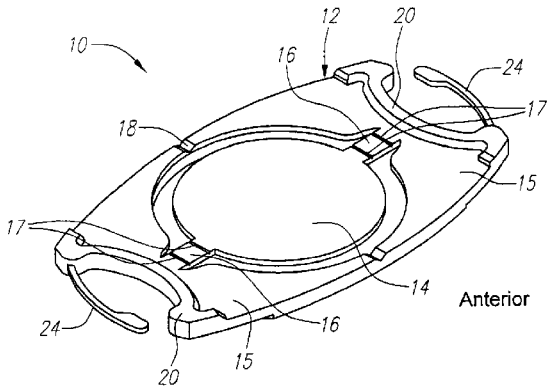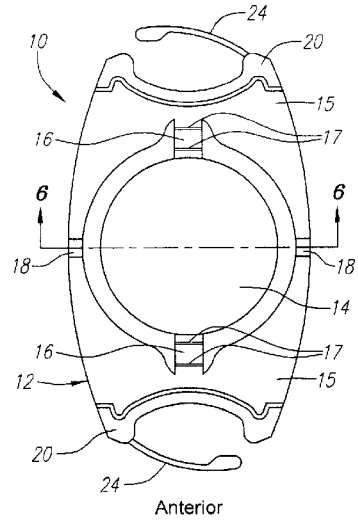
7 Claims, 4 Drawing Sheets