US006762915B2

(12) **United States Patent**
Pokhil et al.

(10) **Patent No.: US 6,762,915 B2**
(45) **Date of Patent: Jul. 13, 2004**

(54) **MAGNETORESISTIVE SENSOR WITH OVERSIZED PINNED LAYER**

(75) Inventors: **Taras Grigoryevich Pokhil**, Arden Hills, MN (US); **Olle Gunnar Heinonen**, Eden Prairie, MN (US); **Chunhong Hou**, Savage, MN (US)

(73) Assignee: **Seagate Technology LLC**, Scotts Valley, CA (US)

(*) Notice: Subject to any disclaimer, the term of this patent is extended or adjusted under 35 U.S.C. 154(b) by 98 days.

(21) Appl. No.: **10/056,729**

(22) Filed: **Jan. 25, 2002**

(65) **Prior Publication Data**

US 2003/0043503 A1 Mar. 6, 2003

Related U.S. Application Data

(60) Provisional application No. 60/317,321, filed on Sep. 5, 2001.

(51) **Int. Cl.**[7] **G11B 5/39**

(52) **U.S. Cl.** **360/324.11**; 360/324; 360/324.1

(58) **Field of Search** 360/324.11, 324.12, 360/324.2, 324, 324.1

(56) **References Cited**

U.S. PATENT DOCUMENTS

5,650,958	A	*	7/1997	Gallagher et al.	365/173
6,122,151	A	*	9/2000	Saito et al.	360/324.12
6,466,419	B1	*	10/2002	Mao	360/324.12
2003/0039080	A1	*	2/2003	Kagami et al.	360/324.1
2003/0086216	A1	*	5/2003	Kagami et al.	360/324.2

FOREIGN PATENT DOCUMENTS

JP	10091920	A	*	4/1998	G11B/5/39
JP	10190090	A	*	7/1998	H01L/43/00
JP	11175925	A	*	7/1999	G11B/5/39

* cited by examiner

Primary Examiner—William Klimowicz
(74) *Attorney, Agent, or Firm*—Kinney & Lange, P.A.

(57) **ABSTRACT**

A magnetoresistive stack for use in a magnetic read head has a plurality of layers including a ferromagnetic free layer, a ferromagnetic pinned layer, and an antiferromagnetic pinning layer. The pinned layer and pinning layer each have a greater number of structural grains than the free layer, which decreases a fluctuation of magnetization in the magnetoresistive stack without decreasing a spatial resolution of the magnetoresistive stack.
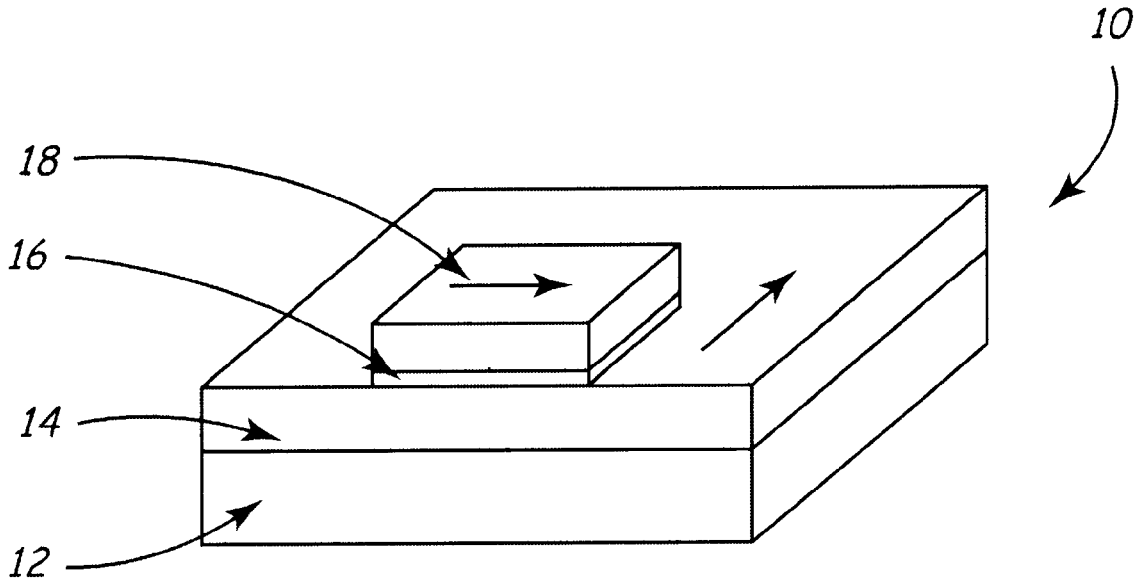
14 Claims, 4 Drawing Sheets