US005943115A

United States Patent [19]

Ferguson

[11] **Patent Number: 5,943,115**

[45] **Date of Patent: Aug. 24, 1999**

[54] **SERVO TRACKING SYSTEM UTILIZING PHASE-SENSITIVE DETECTION OF REFLECTANCE VARIATIONS**

[75] Inventor: **R. Daniel Ferguson**, Melrose, Mass.

[73] Assignee: **Physical Sciences, Inc.**, Andover, Mass.

[21] Appl. No.: **09/063,519**

[22] Filed: **Apr. 21, 1998**

Related U.S. Application Data

[63] Continuation of application No. 08/636,668, Apr. 23, 1996, Pat. No. 5,767,941.

[51] **Int. Cl.**[6] **A61B 3/14**

[52] **U.S. Cl.** **351/209**

[58] **Field of Search** 251/200, 205, 251/206, 209, 210, 221; 372/38

[56] **References Cited**

U.S. PATENT DOCUMENTS

4,264,152	4/1981	Crane	351/1
4,443,075	4/1984	Crane	351/209
4,561,436	12/1985	Munnerlyn	128/303.1
4,764,005	8/1988	Webb et al.	351/205
4,765,730	8/1988	Webb	351/205
4,781,453	11/1988	Kobayashi	351/205
4,856,891	8/1989	Pflibsen et al.	351/210
4,881,808	11/1989	Bille et al.	351/221
4,924,507	5/1990	Chao et al.	382/31
4,931,053	6/1990	L'Esperance, Jr.	606/2
4,964,717	10/1990	Koester	351/219
5,029,220	7/1991	Juday	382/6
5,094,523	3/1992	Reznichenko et al.	351/221
5,098,426	3/1992	Sklar et al.	606/5
5,106,184	4/1992	Milbocker	351/221
5,122,135	6/1992	Durr et al.	606/4
5,129,400	7/1992	Makino et al.	128/666
5,243,368	9/1993	Ito et al.	351/221
5,252,999	10/1993	Sukigara et al.	351/221
5,347,329	9/1994	Ota	351/221
5,353,073	10/1994	Kobayashi	351/221
5,360,010	11/1994	Applegate	128/745
5,360,424	11/1994	Klopotek	606/4
5,425,729	6/1995	Ishida et al.	606/13
5,430,509	7/1995	Kobayashi	351/221
5,480,396	1/1996	Simon et al.	606/4
5,778,016	7/1998	Sucha et al.	372/38

FOREIGN PATENT DOCUMENTS

0770370	5/1997	European Pat. Off.	A61F 9/00
WO90/09141	8/1990	WIPO .	
WO93/08877	5/1993	WIPO	A61N 5/02
WO95/28989	11/1995	WIPO	A61N 5/06

OTHER PUBLICATIONS

International Search Report for corresponding PCT application No. PCT/US97/06581 dated Sep. 3, 1997.

Primary Examiner—George Manuel
Attorney, Agent, or Firm—Testa, Hurwitz & Thibeault, LLP

[57] **ABSTRACT**

Apparatus and methods for tracking a feature on a target surface and continually providing analog corrections to tracking mirrors in real time by utilizing a low-power incoherent tracking beam to detect the movements of a reference feature on the target and confocal reflectometry to monitor the reflection from the tracking beam's current position are described. The apparatus includes a dithering device for dithering the tracking beam in a first and a second direction with an oscillatory motion, a tracking device for controlling the position of a therapeutic beam relative to a target and for controlling the position of the tracking beam relative to a reference feature, a reflectometer for providing an output signal with a phase corresponding to a phase of the reflected tracking beam, and a signal processor for comparing the phase of the reflectometer output signal to the phases of the oscillatory motion and for controlling the tracking device so that the therapeutic beam to tracks relative to the reference feature.
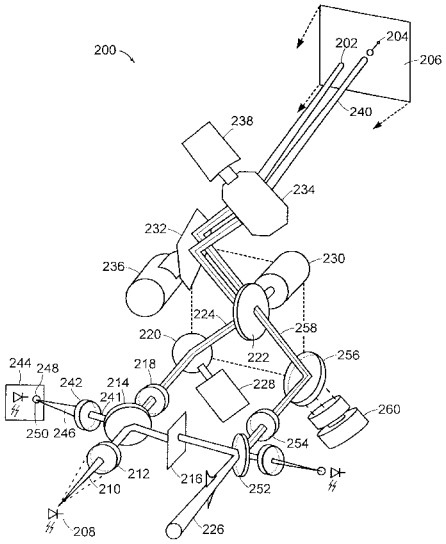
14 Claims, 4 Drawing Sheets