US007242315B2

(12) **United States Patent**
Affolter et al.

(10) **Patent No.: US 7,242,315 B2**
(45) **Date of Patent: Jul. 10, 2007**

(54) **SELF CONTAINED DEVICE FOR DISPLAYING ELECTRONIC INFORMATION**

(75) Inventors: **Allen Affolter**, Indiana, PA (US); **Titus Mathews**, Calgary (CA)

(73) Assignee: **ATG Design Works, LLC**, Indiana, PA (US)

(*) Notice: Subject to any disclaimer, the term of this patent is extended or adjusted under 35 U.S.C. 154(b) by 0 days.

(21) Appl. No.: **10/828,406**

(22) Filed: **Apr. 19, 2004**

(65) **Prior Publication Data**

US 2004/0227147 A1 Nov. 18, 2004

Related U.S. Application Data

(60) Provisional application No. 60/469,984, filed on May 13, 2003.

(51) **Int. Cl.**
G08B 5/22 (2006.01)

(52) **U.S. Cl.** **340/815.83**; 434/317; 345/169

(58) **Field of Classification Search** 340/815.83; 257/99; 434/317, 308, 309; 361/681; 345/169, 345/156, 901
See application file for complete search history.

(56) **References Cited**

U.S. PATENT DOCUMENTS

4,656,469	A	4/1987	Oliver et al.	
5,531,600	A *	7/1996	Baer et al.	434/317
5,532,711	A	7/1996	Harris	
5,538,430	A *	7/1996	Smith et al.	434/178
5,761,485	A	6/1998	Munyan	
6,021,306	A *	2/2000	McTaggart	434/317
6,130,773	A	10/2000	Jacobson et al.	
6,396,472	B1	5/2002	Jacklin	
6,481,851	B1	11/2002	McNelley et al.	
6,490,402	B1	12/2002	Ota	
6,597,111	B2	7/2003	Silvernail et al.	
6,614,057	B2	9/2003	Silvernail et al.	
6,624,568	B2	9/2003	Silvernail	
6,763,995	B1 *	7/2004	Song	235/375
6,788,283	B1 *	9/2004	Blotky et al.	345/156
6,897,850	B2 *	5/2005	Sugimoto	345/169
2001/0040560	A1 *	11/2001	Amron	345/169

FOREIGN PATENT DOCUMENTS

DE 35 15 897 C 12/1986

OTHER PUBLICATIONS

One page printout from www.universaldisplay.com—Product Concepts—Nov. 7, 2003.
Two page printout from http://neasia.nikkeibp.com—Packaging Made Smart with Paper-Thin Battery—Nov. 4, 2003.
International Search Report mailed Nov. 12, 2004—4 pages.

* cited by examiner

Primary Examiner—Anh V. La
(74) *Attorney, Agent, or Firm*—Brouse McDowell; Roger D. Emerson; Daniel A. Thomson

(57) **ABSTRACT**

A periodical is shown having flexible pages whereon is affixed a thin flexible electronic display. The display includes a flexible membrane, control circuitry, and self-contained power source, which may be a thin flexible battery. A display may be affixed to one or more of the pages of the periodical for use in displaying dynamic information or video.
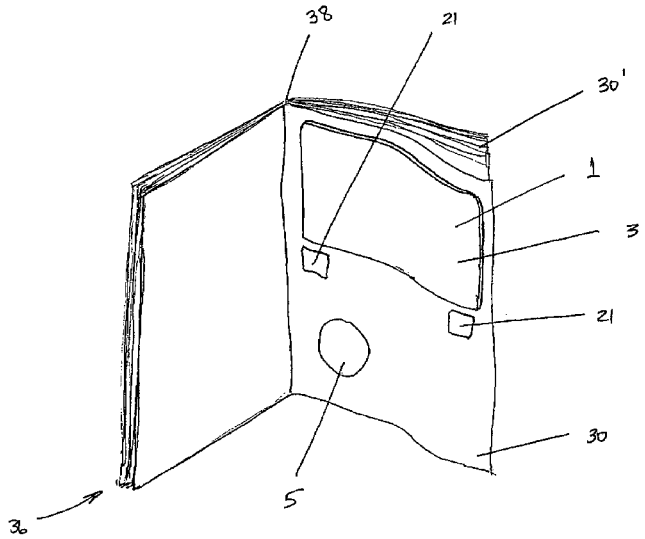
30 Claims, 7 Drawing Sheets