US005734115A

United States Patent [19]

Camp et al.

[11] Patent Number: 5,734,115

[45] Date of Patent: Mar. 31, 1998

[54] **ACCELERATED FADE APPARATUS AND METHOD OF ITS USE**

[75] Inventors: **Alphonse D. Camp**; **Keith B. Kahen**, both of Rochester; **Gary A. Granath**, Fairport; **Gerald W. Smith**, Churchville, all of N.Y.

[73] Assignee: **Eastman Kodak Company**, Rochester, N.Y.

[21] Appl. No.: **763,634**

[22] Filed: **Dec. 4, 1996**

[51] **Int. Cl.**[6] **G01N 25/00**

[52] **U.S. Cl.** **73/365.6**; 73/159

[58] **Field of Search** 73/159, 865.6; 362/1, 2

[56] **References Cited**

U.S. PATENT DOCUMENTS

3,576,125	4/1971	Kockott et al. .	
3,797,918	3/1974	Kockott	362/2
4,544,995	10/1985	Suga .	
4,627,287	12/1986	Suga .	
4,704,903	11/1987	Suga et al. .	
4,760,748	8/1988	Katayanagi et al. .	
4,843,893	7/1989	Huber et al.	73/865.6
4,995,273	2/1991	Kisima et al.	73/865.6
5,138,892	8/1992	Suga .	

FOREIGN PATENT DOCUMENTS

404340441	11/1992	Japan	73/865.6

OTHER PUBLICATIONS

Derwent Abstract DE 4330759, Mar. 1995.

Derwent Abstract JP 7234181, Sep. 1995.

Primary Examiner—Robert Raevis

Attorney, Agent, or Firm—Paul A. Leipold

[57] **ABSTRACT**

The invention relates to an apparatus for light fastness testing comprising a light source, means for dividing ultraviolet and visible light from infrared rays, means to direct the visible component of light into spherical cavity, and means to mount test samples in apertures in said cavity.
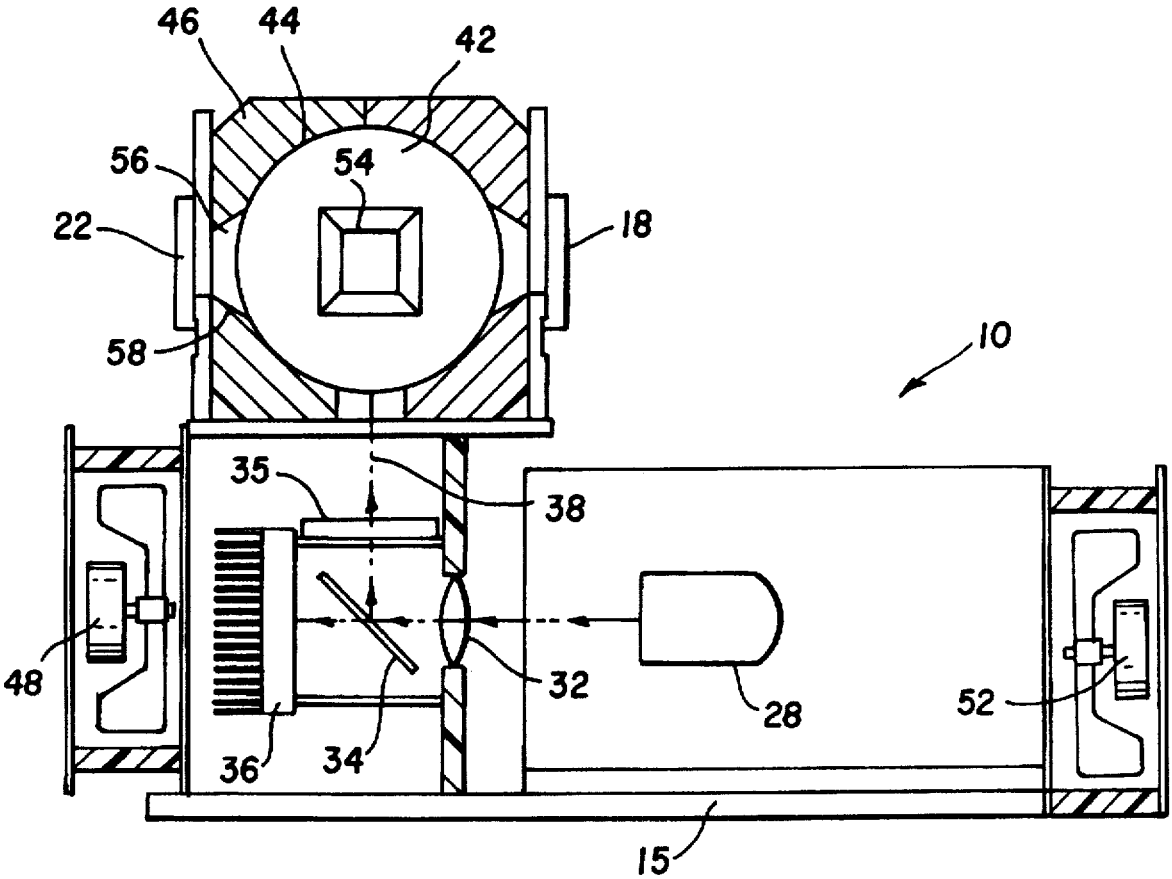
24 Claims, 3 Drawing Sheets