Feb. 4, 1969 E. S. GORDON ET AL 3,425,415

CONTROLLED INFUSION SYSTEM

Filed May 2, 1966 Sheet 1 of 2

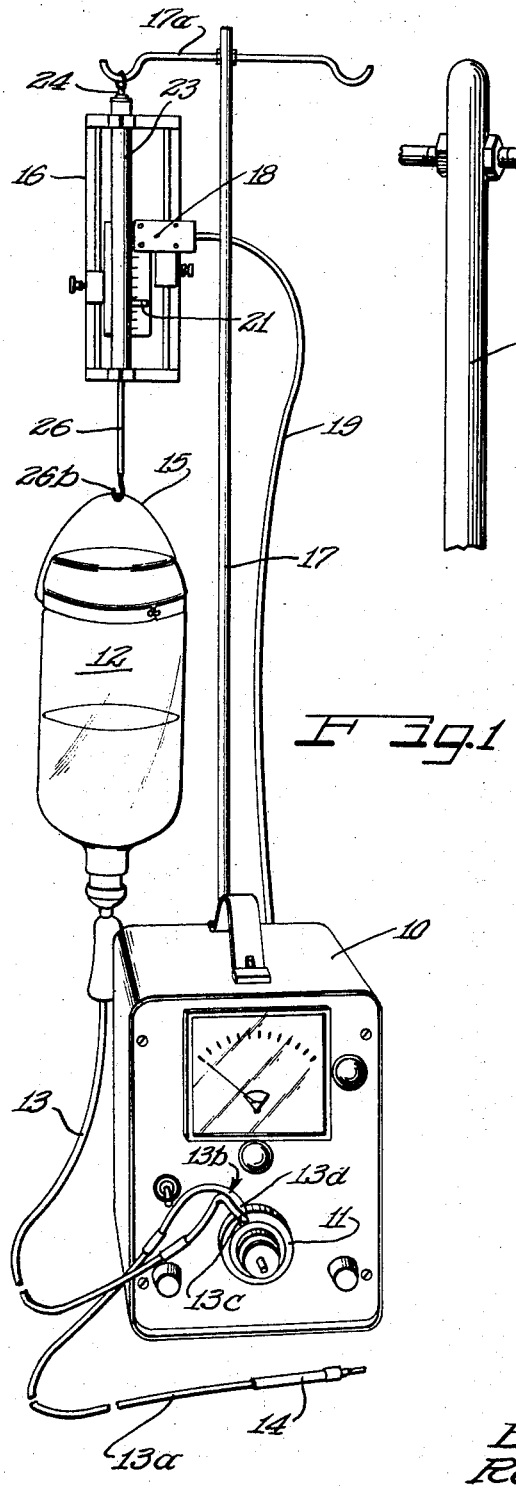

Fig. 1

Fig. 2

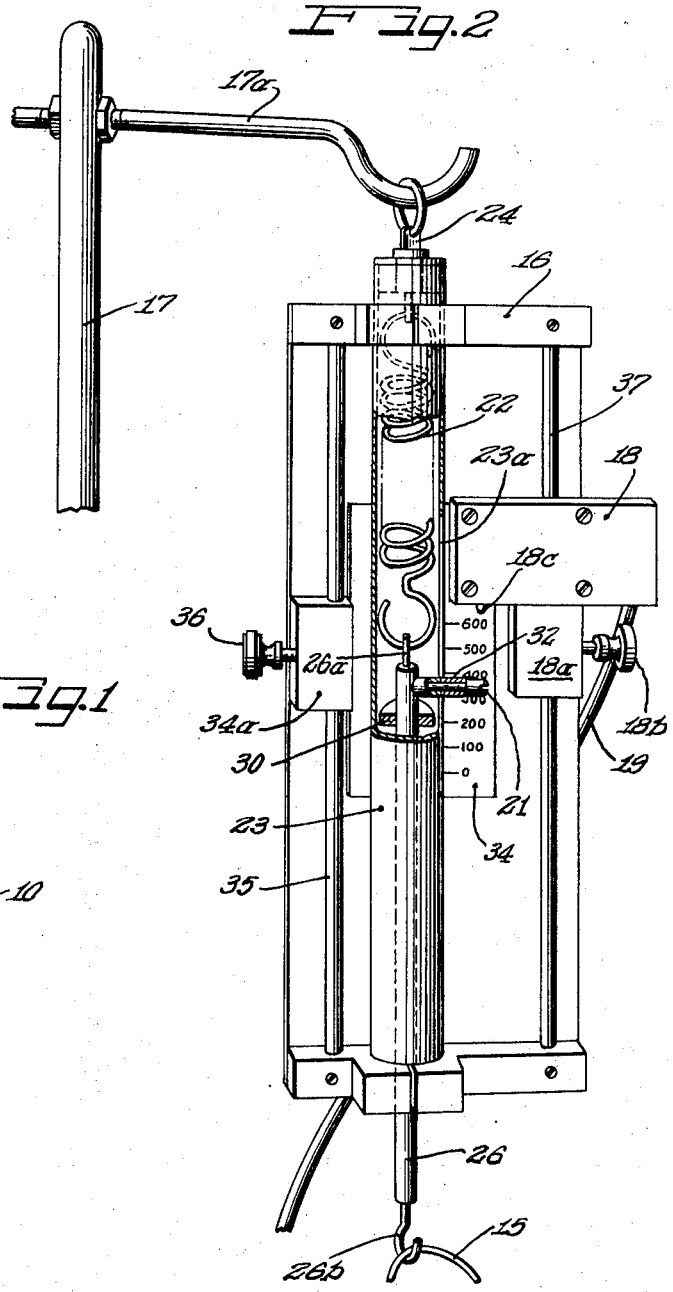

INVENTORS
Ernest S. Gordon
Ronald B. Schwab
Leander O. Thunberg

BY Hill, Sherman, Meroni, Gross & Simpson ATTORNEYS