US005223115A

United States Patent [19]

DiSanto et al.

[11] Patent Number: 5,223,115

[45] Date of Patent: Jun. 29, 1993

[54] ELECTROPHORETIC DISPLAY WITH SINGLE CHARACTER ERASURE

[75] Inventors: **Frank J. DiSanto**, North Hills; **Denis A. Krusos**, Lloyd Harbor, both of N.Y.

[73] Assignee: **CopyTele, Inc.**, Huntington Station, N.Y.

[21] Appl. No.: **752,184**

[22] Filed: **Aug. 23, 1991**

Related U.S. Application Data

[63] Continuation of Ser. No. 699,216, May 13, 1991, abandoned.

[51] **Int. Cl.**[5] **G09G 3/34**; G09G 3/00

[52] **U.S. Cl.** ..... **204/299 R**; 204/180.1; 340/787

[58] **Field of Search** ..... 204/180.1, 299 R, 299 EC; 340/787, 788, 716; 313/517, 518, 483; 359/296, 297

[56] **References Cited**

U.S. PATENT DOCUMENTS

4,045,327	8/1977	Noma et al.	204/180.1 X
4,093,534	6/1978	Carter et al.	204/180.1 X
4,123,346	10/1978	Ploix	204/180.1 X
4,218,302	8/1980	Dalisa et al.	204/180.1 X
4,324,456	4/1982	Dalisa	259/296
4,522,472	6/1985	Liebert et al.	340/787
4,655,897	4/1987	DiSanto et al.	204/299 R
4,680,103	7/1987	Solomon et al.	204/299 R
4,732,830	3/1988	DiSanto et al.	204/299 R X
4,742,345	5/1988	DiSanto et al.	340/787
4,772,820	9/1988	DiSanto et al.	313/583

Primary Examiner—John Niebling
Assistant Examiner—John S. Starsiak, Jr.
Attorney, Agent, or Firm—Arthur L. Plevy

[57] **ABSTRACT**

A triode type electrophoretic display includes a pair of substantially identical glass faceplates sealed against a peripheral sealing wall to form a fluid-tight envelope for containing an electrophoretic fluid. A first faceplate bears the anode which is composed of a plurality of elongated substantially parallel horizontal conductor members disposed within a first plane and a plurality of elongated substantially parallel vertical conductor members. The horizontal and vertical members are insulated from each other by interstitial insulator strips underlying the vertical members and by a SiO_2 layer. The vertical and horizontal members are slotted and grouped into groups so that the area of the intersection of a vertical group and a horizontal group approximates that of a single character. The cathode and grid are formed on the other faceplate in essentially the same manner as the composite anode. By placing the proper voltages on the horizontal and vertical elements of the anode, selective characters may be erased from the display.
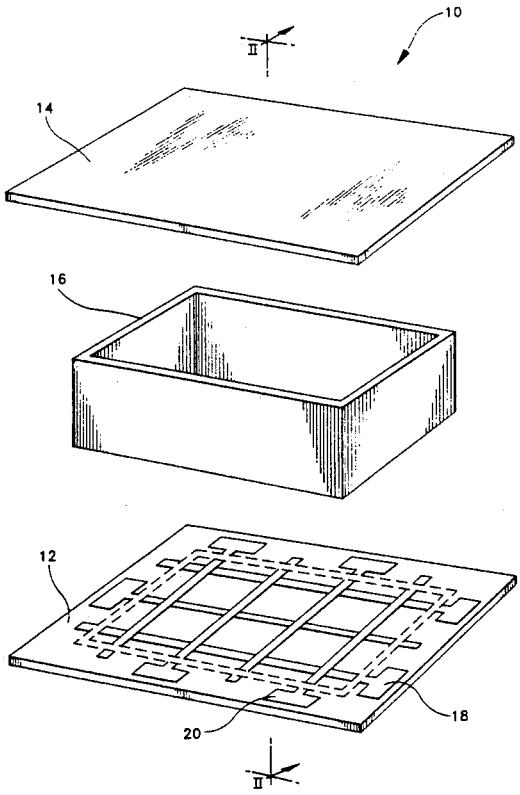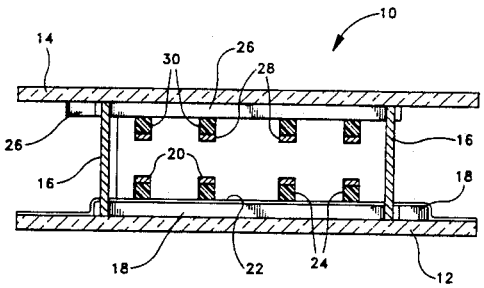
26 Claims, 3 Drawing Sheets