US007920215B2

(12) **United States Patent**
Okamoto et al.

(10) **Patent No.: US 7,920,215 B2**
(45) **Date of Patent: Apr. 5, 2011**

(54) **PORTABLE ELECTRONIC DEVICE**

(75) Inventors: **Satoru Okamoto**, Kanagawa (JP); **Shunpei Yamazaki**, Tokyo (JP)

(73) Assignee: **Semiconductor Energy laboratory Co., Ltd.** (JP)

(*) Notice: Subject to any disclaimer, the term of this patent is extended or adjusted under 35 U.S.C. 154(b) by 0 days.

(21) Appl. No.: **12/239,138**

(22) Filed: **Sep. 26, 2008**

(65) **Prior Publication Data**

US 2009/0029739 A1 Jan. 29, 2009

Related U.S. Application Data

(63) Continuation of application No. 09/934,699, filed on Aug. 22, 2001, now Pat. No. 7,430,025.

(30) **Foreign Application Priority Data**

Aug. 23, 2000 (JP) 2000-252717

(51) **Int. Cl.**
G02F 1/1335 (2006.01)

(52) **U.S. Cl.** **349/12**; 349/28; 349/73; 349/69; 345/76; 345/91; 345/173; 315/169.3

(58) **Field of Classification Search** 349/12, 349/43, 50, 41, 69, 113, 25, 28, 73, 74; 315/169.1, 315/169.3; 313/505; 345/173, 182, 207, 345/76, 91; 455/566
See application file for complete search history.

(56) **References Cited**

U.S. PATENT DOCUMENTS

4,580,877	A	4/1986	Washo	
4,720,781	A	1/1988	Crossland et al.	
4,809,078	A	2/1989	Yabe et al.	
5,262,654	A *	11/1993	Yamazaki	257/53
5,399,502	A	3/1995	Friend et al.	
5,734,914	A	3/1998	Nakamura et al.	
5,838,308	A *	11/1998	Knapp et al.	345/173
5,852,481	A	12/1998	Hwang	
5,893,730	A	4/1999	Yamazaki et al.	
6,037,635	A	3/2000	Yamazaki	
6,069,648	A	5/2000	Suso et al.	
6,072,454	A	6/2000	Nakai et al.	
6,091,449	A	7/2000	Matsunaga et al.	
6,098,055	A	8/2000	Watanabe et al.	
6,125,286	A	9/2000	Jahagirdar et al.	
6,158,884	A	12/2000	Lebby et al.	
6,239,839	B1	5/2001	Matsunaga et al.	
6,262,785	B1	7/2001	Kim	
6,265,833	B1	7/2001	Kim et al.	
6,277,679	B1	8/2001	Ohtani	
6,282,183	B1	8/2001	Harris et al.	

(Continued)

FOREIGN PATENT DOCUMENTS

EP 0 845 900 A1 6/1998

(Continued)

Primary Examiner — Thoi V Duong

(74) *Attorney, Agent, or Firm* — Husch Blackwell LLP

(57) **ABSTRACT**

When image data is displayed on the display portion of a conventional mobile telephone, characters cannot be displayed thereon, and thus the image data and the characters cannot be simultaneously displayed. In a portable electronic device according to the present invention, a cover member having a first display device (**101**) for displaying an image (digital still image or the like) and a second display device (**102**) having a touch input operational portion (for displaying characters, symbols, or the like) are attached to each other so as to allow opening and closing.
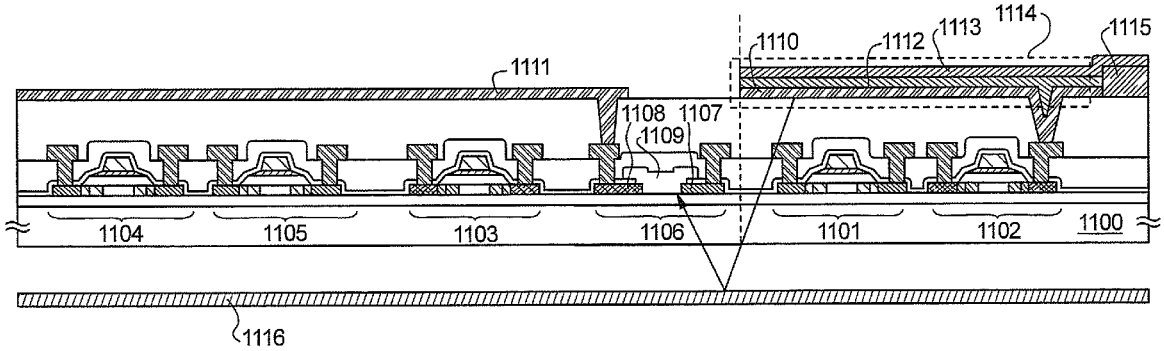
8 Claims, 13 Drawing Sheets