US008619415B1

(12) **United States Patent**
Lam et al.

(10) **Patent No.: US 8,619,415 B1**
(45) **Date of Patent: Dec. 31, 2013**

(54) **ROTATABLE AND EXTENDABLE DISPLAY PORTION OF A COMPUTING DEVICE**

(75) Inventors: **Lawrence Lam**, San Jose, CA (US); **Gadi Amit**, San Francisco, CA (US)

(73) Assignee: **Google Inc.**, Mountain View, CA (US)

(*) Notice: Subject to any disclaimer, the term of this patent is extended or adjusted under 35 U.S.C. 154(b) by 306 days.

(21) Appl. No.: **13/077,118**

(22) Filed: **Mar. 31, 2011**

(51) **Int. Cl.**
G06F 1/16 (2006.01)

(52) **U.S. Cl.**
USPC **361/679.26**; 361/679.05; 361/679.27; 312/223.1; 312/223.2; 248/917; 248/918

(58) **Field of Classification Search**
USPC 361/679.05
See application file for complete search history.

(56) **References Cited**

U.S. PATENT DOCUMENTS

5,494,447	A *	2/1996	Zaidan	439/31
6,532,147	B1 *	3/2003	Christ, Jr.	361/679.27
6,816,365	B2	11/2004	Hill et al.	
6,831,229	B1 *	12/2004	Maatta et al.	174/66
7,092,246	B2	8/2006	Tanaka et al.	
7,215,538	B1	5/2007	Chen et al.	
7,353,050	B2 *	4/2008	Im et al.	455/575.3
7,565,720	B1 *	7/2009	Ligtenberg et al.	16/366
7,646,593	B2	1/2010	Smejkalova	
7,679,890	B2	3/2010	Yang	
7,821,780	B2	10/2010	Choy	
8,068,334	B2 *	11/2011	Tang	361/679.27
8,295,652	B1 *	10/2012	Newstead	382/311
8,300,394	B2 *	10/2012	Senatori	361/679.27
8,315,042	B2 *	11/2012	Fang et al.	361/679.01
8,320,123	B2 *	11/2012	Chen	361/679.59
8,416,561	B2 *	4/2013	Hamada	361/679.27
2002/0044411	A1 *	4/2002	Iredale	361/683
2003/0007322	A1 *	1/2003	Amemiya et al.	361/683
2003/0103324	A1 *	6/2003	Gallivan	361/681
2006/0256512	A1 *	11/2006	Esther Kang	361/681
2008/0024388	A1	1/2008	Bruce	

* cited by examiner

Primary Examiner — Anthony Q Edwards
(74) *Attorney, Agent, or Firm* — Brake Hughes Bellermann LLP

(57) **ABSTRACT**

In one general aspect a computing device can include a base portion including an input region, a display portion, and a rotating mechanism fixedly coupled to the display portion. The computing device can include a connecting rod coupled to the rotating mechanism and to the base portion. The rotating mechanism and connecting rod can be configured to move a bottom portion of the display portion in a direction away from the input region in response to the display portion being rotated about an axis of the rotating mechanism from a closed position with respect to the base portion toward a flat position with respect to the base portion.
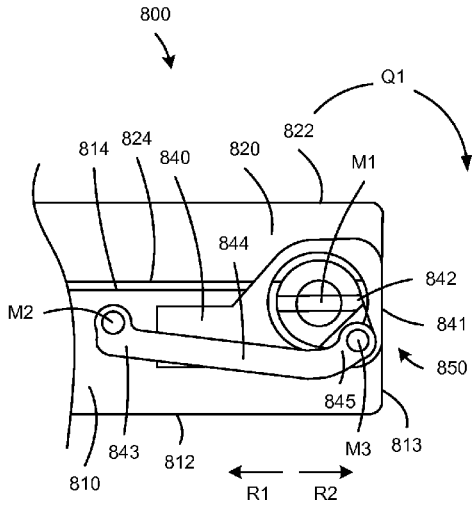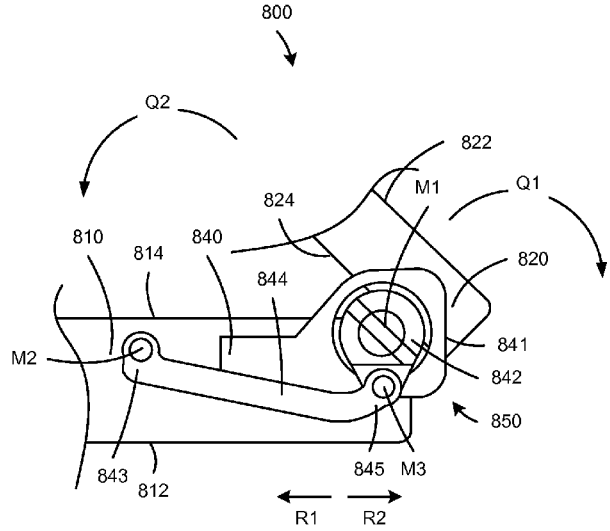
23 Claims, 13 Drawing Sheets