Nov. 10, 1959 D. P. SEIFERT 2,911,715

HAIR CLIPPER

Filed Nov. 18, 1958

Fig. 1

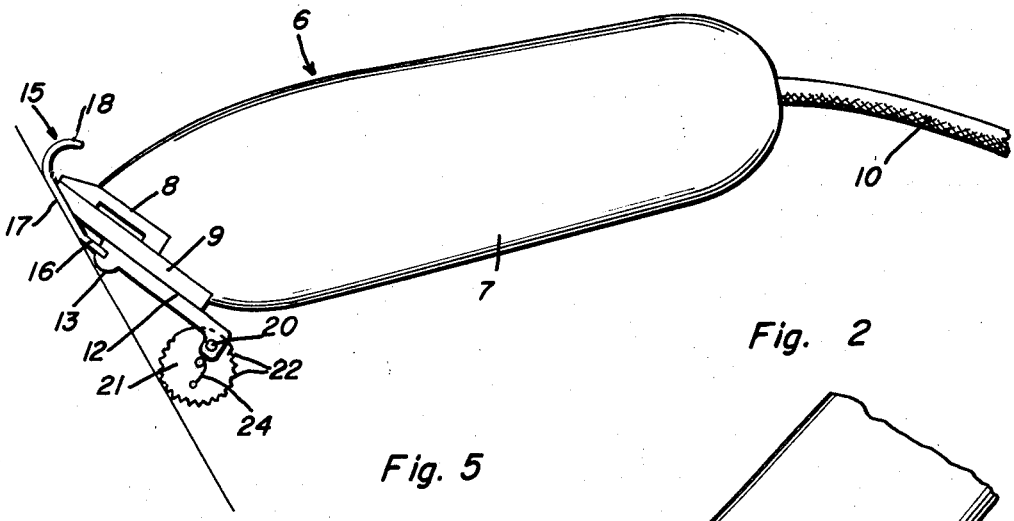

Fig. 2

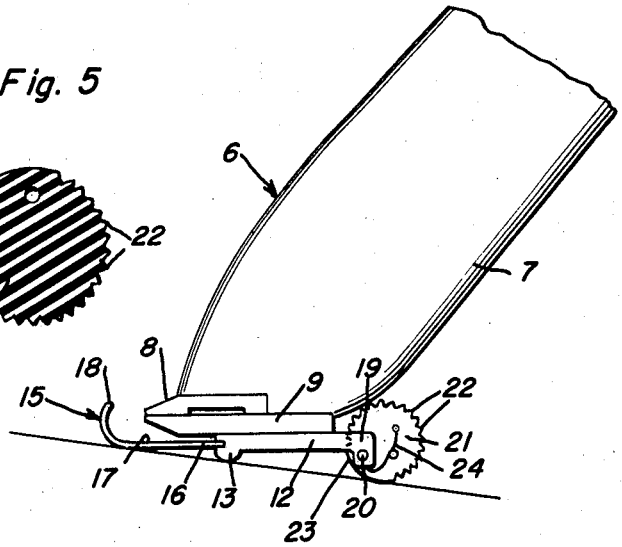

Fig. 5

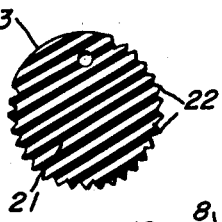

Fig. 4

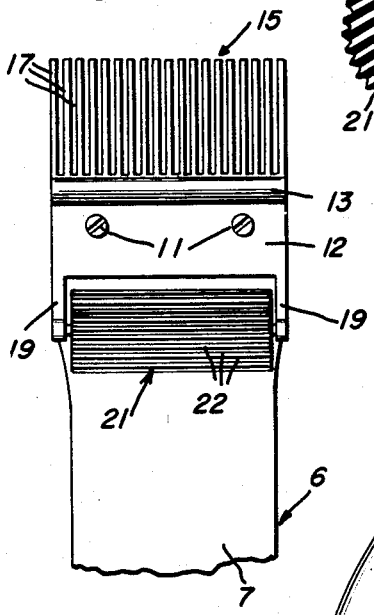

Fig. 3

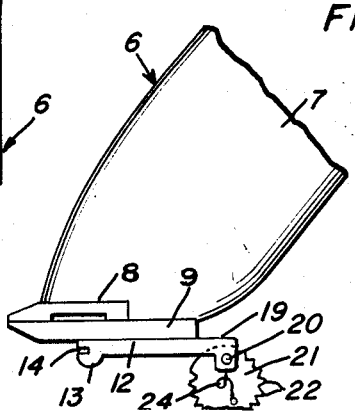

Donald P. Seifert

INVENTOR.

BY Clarence A. O'Brien and Harvey B. Jacobson

Attorneys