US009411115B2

(12) **United States Patent**
Tanaka et al.

(10) **Patent No.: US 9,411,115 B2**
(45) **Date of Patent: Aug. 9, 2016**

(54) **OPTICAL FIBER RIBBON**

(71) Applicant: **Furukawa Electric Co., Ltd.**, Tokyo (JP)

(72) Inventors: **Hiroki Tanaka**, Tokyo (JP); **Minoru Saito**, Tokyo (JP); **Hirotaka Watanabe**, Tokyo (JP); **Hiroaki Ito**, Tokyo (JP); **Yukio Ishii**, Tokyo (JP); **Yoshihiro Arashitani**, Tokyo (JP)

(73) Assignee: **FURUKAWA ELECTRIC CO., LTD.**, Tokyo (JP)

(*) Notice: Subject to any disclaimer, the term of this patent is extended or adjusted under 35 U.S.C. 154(b) by 0 days.

(21) Appl. No.: **14/704,503**

(22) Filed: **May 5, 2015**

(65) **Prior Publication Data**

US 2015/0234140 A1 Aug. 20, 2015

Related U.S. Application Data

(63) Continuation of application No. PCT/JP2013/006388, filed on Oct. 29, 2013.

(30) **Foreign Application Priority Data**

Nov. 5, 2012 (JP) 2012-243613

(51) **Int. Cl.**
G02B 6/44 (2006.01)

(52) **U.S. Cl.**
CPC ***G02B 6/443*** (2013.01); ***G02B 6/4403*** (2013.01)

(58) **Field of Classification Search**
None
See application file for complete search history.

(56) **References Cited**

U.S. PATENT DOCUMENTS

2003/0119934 A1* 6/2003 Hu C03C 25/106 522/90
2004/0146255 A1* 7/2004 Ishikawa G02B 6/4403 385/114
2005/0228063 A1* 10/2005 Komiya C03C 25/1055 522/96
2008/0181565 A1* 7/2008 Arashitani G02B 6/14 385/114
2008/0241535 A1* 10/2008 Cattron C03C 25/1065 428/392
2014/0226941 A1* 8/2014 Tanaka G02B 6/4482 385/114

FOREIGN PATENT DOCUMENTS

JP 2005-513237 A 5/2005
JP 2007-272060 A 10/2007
JP 4630210 B2 2/2011
JP 2011-158580 A 8/2011
JP 2011-158581 A 8/2011

* cited by examiner

Primary Examiner — Michelle R Connelly
(74) *Attorney, Agent, or Firm* — Oblon, McClelland, Maier & Neustadt, L.L.P

(57) **ABSTRACT**

An optical fiber ribbon according to the present invention includes a collective coating layer containing an ultraviolet curable resin containing amorphous PPG and an amorphous monomer, the collective coating layer formed around coated optical fibers. The collective coating layer has an equilibrium elastic modulus of 12 MPa to 20 MPa, both inclusive, and a yield point elongation of 5% to 9%, both inclusive, and the adhesion between the collective coating layer and the outermost layers of the coated optical fibers is 12 N/cm to 15 N/cm, both inclusive.
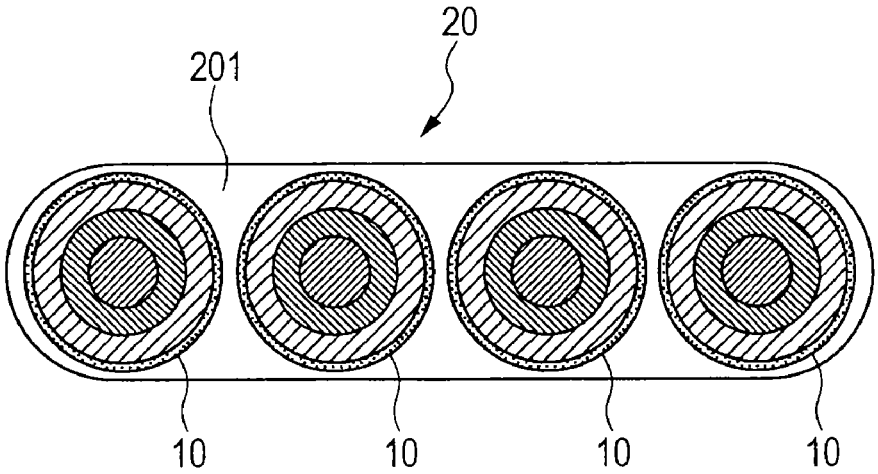
2 Claims, 3 Drawing Sheets