US009410115B2

(12) **United States Patent**
Isely et al.

(10) **Patent No.: US 9,410,115 B2**
(45) **Date of Patent: Aug. 9, 2016**

(54) **PORTABLE SAMPLE DISRUPTOR APPARATUS, KITS, AND METHODS**

(71) Applicant: **ZYMO RESEARCH CORPORATION**, Irvine, CA (US)

(72) Inventors: **Nikolas M. Isely**, Moraga, CA (US); **Marc E. Van Eden**, North Tustin, CA (US); **Jonathan K. Brown**, Lake Forest, CA (US)

(73) Assignee: **ZYMO RESEARCH CORPORATION**, Irvine, CA (US)

(*) Notice: Subject to any disclaimer, the term of this patent is extended or adjusted under 35 U.S.C. 154(b) by 0 days.

(21) Appl. No.: **14/288,463**

(22) Filed: **May 28, 2014**

(65) **Prior Publication Data**

US 2014/0342439 A1 Nov. 20, 2014

Related U.S. Application Data

(63) Continuation of application No. 13/419,178, filed on Mar. 13, 2012, now Pat. No. 9,150,826.

(60) Provisional application No. 61/452,464, filed on Mar. 14, 2011.

(51) **Int. Cl.**

C12M 1/02	(2006.01)
C12N 1/06	(2006.01)
C12Q 1/68	(2006.01)
G01N 1/28	(2006.01)
C12N 15/10	(2006.01)
C12M 1/00	(2006.01)
G01N 33/48	(2006.01)
B01F 5/06	(2006.01)
B01F 15/02	(2006.01)
B01L 3/00	(2006.01)

(52) **U.S. Cl.**

CPC ***C12N 1/066*** (2013.01); ***C12M 47/06*** (2013.01); ***G01N 1/286*** (2013.01); *B01F 5/0685* (2013.01); *B01F 15/0279* (2013.01); *B01F 2015/0273* (2013.01); *B01L 3/50853* (2013.01); *B01L 2400/0433* (2013.01); *C12M 1/02* (2013.01); *C12N 15/10* (2013.01); *C12N 15/1003* (2013.01); *C12Q 1/6806* (2013.01)

(58) **Field of Classification Search**

CPC B01F 15/0279; B01F 2015/0273; B01F 5/0685; B01L 2400/0433; C12M 1/02; C12M 47/06; C12N 15/10; C12N 15/1003; C12N 1/066; G01N 1/286

See application file for complete search history.

(56) **References Cited**

U.S. PATENT DOCUMENTS

4,675,298	A *	6/1987	Brusewitz	C12M 23/10 220/361
D668,563	S	10/2012	Isely et al.	
2001/0043883	A1*	11/2001	Chalk	G01N 35/085 422/81
2005/0064395	A1*	3/2005	Israel	B82Y 15/00 435/5
2005/0084957	A1*	4/2005	Atwood	B01L 3/50851 435/304.1

(Continued)

OTHER PUBLICATIONS

"12 Sample Tissue Homogenizer with cooling fan", Apr. 5, 2010, retrieved from http://www.wisbiomed.com, retrieved on Aug. 22, 2011.

(Continued)

Primary Examiner — Jennifer Wecker

(74) *Attorney, Agent, or Firm* — Parker Highlander PLLC

(57) **ABSTRACT**

Apparatuses, kits, and methods for portable sample disruption (e.g., for encouraging cell lysis).
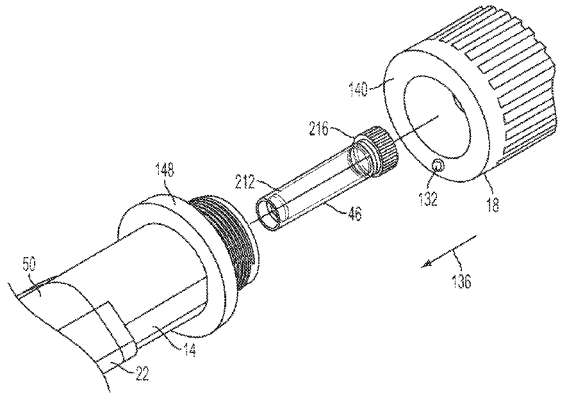
18 Claims, 8 Drawing Sheets