US009409315B1

(12) **United States Patent**
Bourget

(10) **Patent No.: US 9,409,315 B1**
(45) **Date of Patent: Aug. 9, 2016**

(54) **CONCRETE POWER SAW**

(71) Applicant: **Kyle Bourget**, Augusta, KS (US)

(72) Inventor: **Kyle Bourget**, Augusta, KS (US)

(*) Notice: Subject to any disclaimer, the term of this patent is extended or adjusted under 35 U.S.C. 154(b) by 0 days.

(21) Appl. No.: **15/151,291**

(22) Filed: **May 10, 2016**

Related U.S. Application Data

(63) Continuation-in-part of application No. 14/715,209, filed on May 18, 2015.

(51) **Int. Cl.**
B28D 7/02 (2006.01)
B28D 1/04 (2006.01)

(52) **U.S. Cl.**
CPC . ***B28D 7/02*** (2013.01); ***B28D 1/045*** (2013.01)

(58) **Field of Classification Search**
CPC B28D 7/02; B28D 1/045
See application file for complete search history.

(56) **References Cited**

U.S. PATENT DOCUMENTS

1,495,430	A *	5/1924	Parker	B23D 45/024 125/14
4,241,505	A	12/1980	Bodycomb, Jr. et al.	
4,253,362	A	3/1981	Olson	
4,255,995	A	3/1981	Connor	
4,326,864	A	4/1982	Sittler	
6,318,352	B1	11/2001	Gnazzo et al.	
6,557,261	B1	5/2003	Buser et al.	
6,748,660	B2	6/2004	Buser et al.	
6,925,919	B2	8/2005	Liao et al.	
7,013,884	B2	3/2006	Guth	
7,246,406	B2	7/2007	Yarbrough et al.	
7,654,181	B2	2/2010	Quinlan	
7,802,505	B2	9/2010	Hetcher et al.	
7,824,247	B1	11/2010	Bar-Cohen et al.	
8,381,711	B2	2/2013	Loveless	
8,650,997	B1	2/2014	Simon	
8,752,462	B2	6/2014	Frolov	
8,857,421	B2	10/2014	Kondo et al.	
2006/0060179	A1 *	3/2006	Kingsley	B23D 47/12 125/13.01
2006/0191526	A1 *	8/2006	Markley	B23D 47/02 125/13.01
2006/0272464	A1	12/2006	Chen	
2007/0164599	A1 *	7/2007	Johnson	E01C 23/0933 299/39.6
2009/0236900	A1	9/2009	Due et al.	
2010/0269353	A1	10/2010	Martin	
2015/0013513	A1	1/2015	Merck et al.	
2015/0246461	A1	9/2015	Bourget	

FOREIGN PATENT DOCUMENTS

WO	WO2006031236	3/2006

* cited by examiner

Primary Examiner — Joseph J Hail
Assistant Examiner — Marc Carlson
(74) *Attorney, Agent, or Firm* — Kenneth H. Jack; Davis & Jack, L.L.C.

(57) **ABSTRACT**

A concrete saw for cutting a concrete slab incorporating a rollable trolley having upper, lateral, front, and rear ends; an engine fixedly attached to the rollable trolley, the engine having a rotary power output; a blade connected operatively to the engine's rotary power output for, upon movement of the first rollable trolley over the concrete slab, slotting said slab and drawing concrete cuttings therefrom; a shroud fixedly attached to the first rollable trolley, the shroud having a plurality of side walls, a floor, and a ceiling, the shroud housing the blade, and defining a dust containment space; a dust conveyor having input and output ends, the dust conveyor's input end being positioned within the shroud's dust containment space; power transfer pulleys connected operatively to the dust conveyor for conveying the concrete cuttings from the dust conveyor's input end to the output end; and a receptacle under the output end.
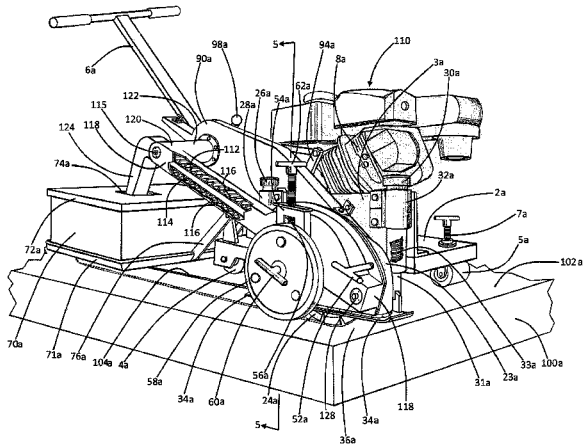
18 Claims, 5 Drawing Sheets