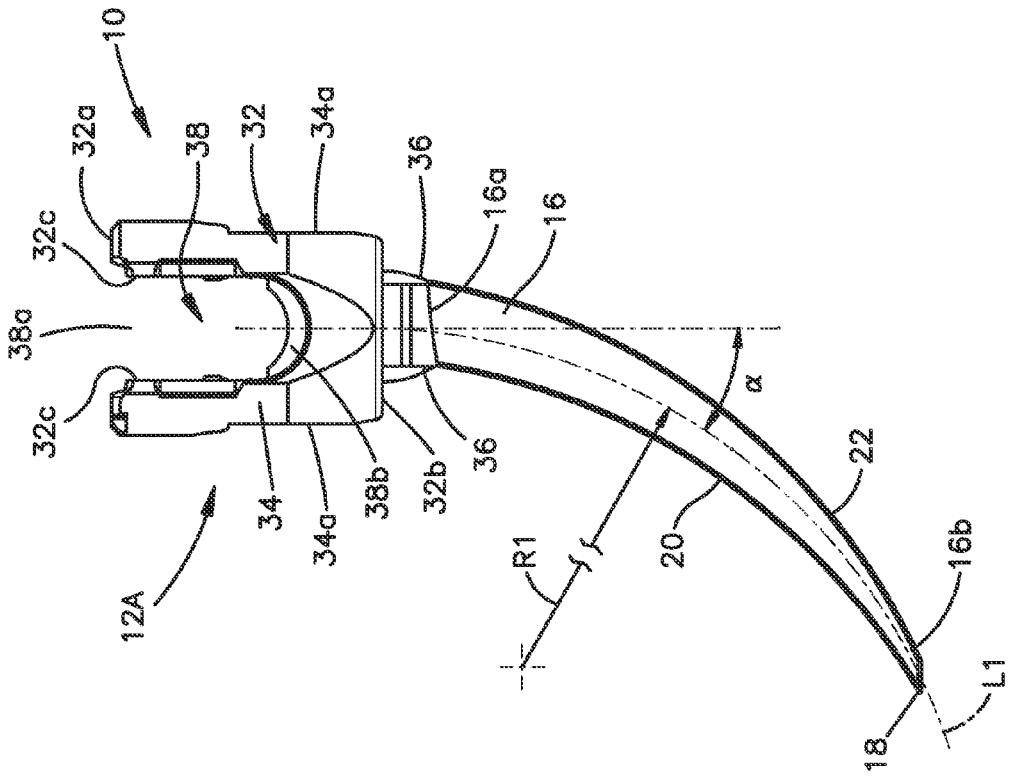

Figure 1B

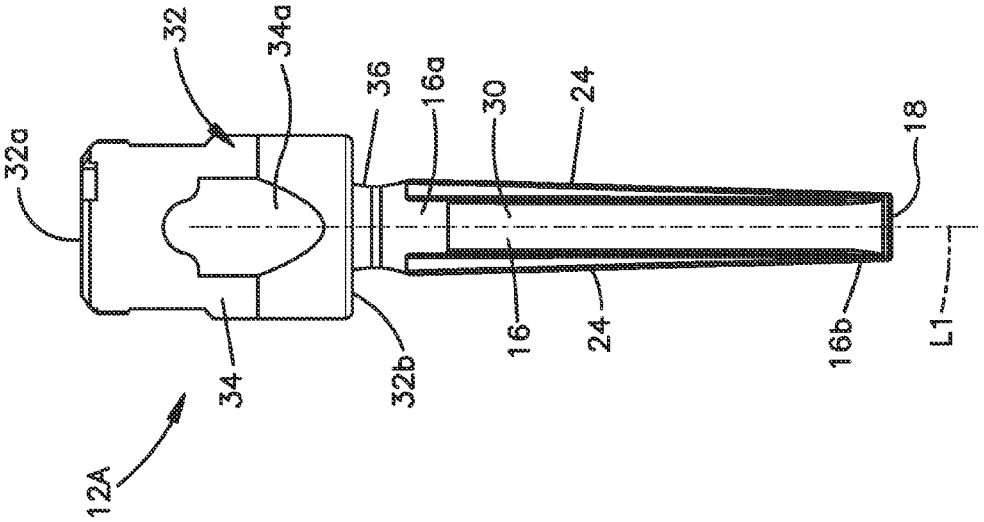

Figure 1A