RAPID MIXING APPARATUS

Original Filed April 29, 1964 2 Sheets-Sheet 1

FIG. 1

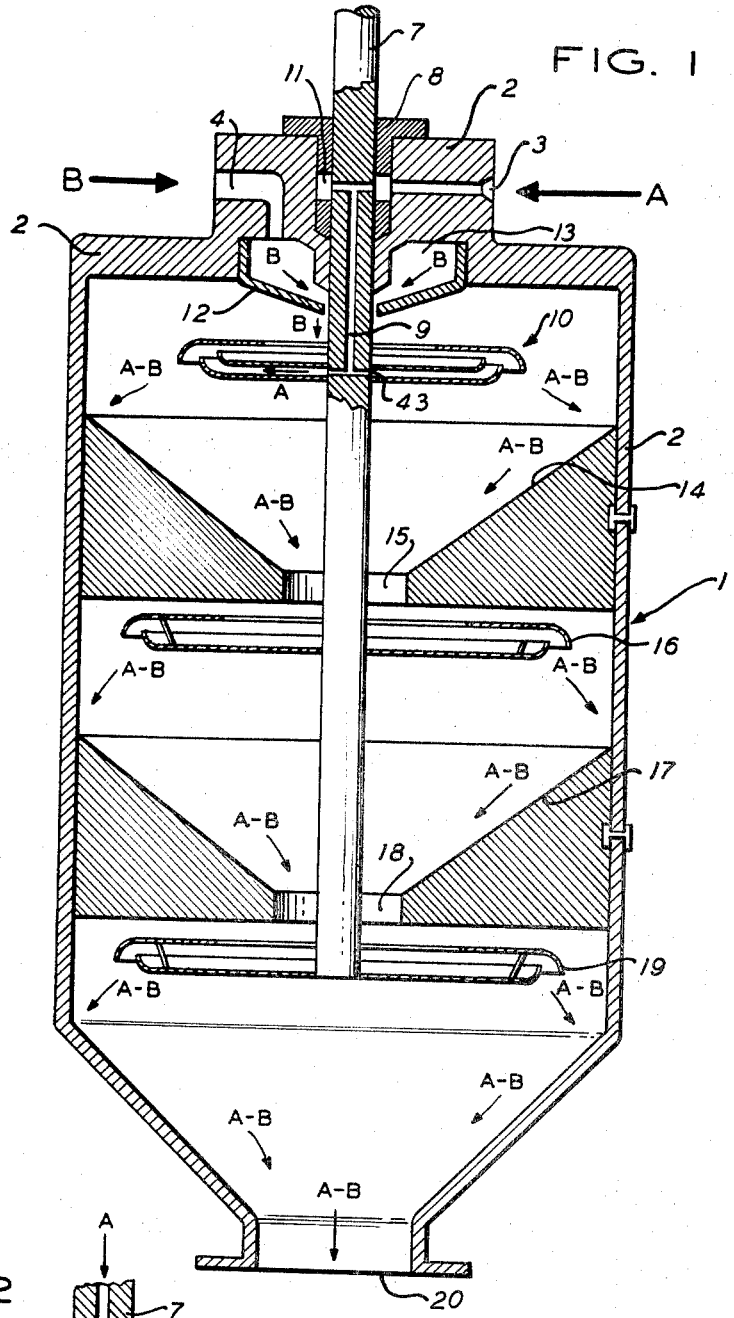

FIG. 2

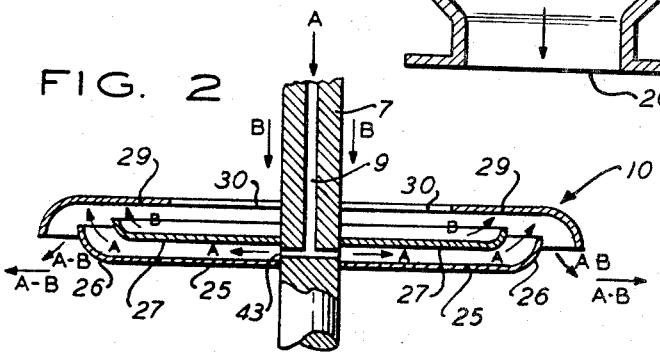

INVENTORS
TSUNEO ONISHI
YOSHIRO HIGASHIYAMA
KATSUO AKAO

John A. Casper
AGENT