US005300115A

United States Patent [19]

Py

[11] Patent Number: 5,300,115

[45] Date of Patent: Apr. 5, 1994

[54] INTRAOCULAR PROSTHESIS

[75] Inventor: Daniel Py, Wellesley, Mass.

[73] Assignee: Keratos, Inc., Wellesley, Mass.

[21] Appl. No.: 978,645

[22] Filed: Nov. 19, 1992

[51] Int. Cl.[5] A61F 2/14

[52] U.S. Cl. 623/4; 623/5; 623/6

[58] Field of Search 623/4–6

[56] References Cited

U.S. PATENT DOCUMENTS

2,714,721	8/1955	Stone	623/5
2,754,520	7/1956	Crawford, Jr. .	
3,454,966	7/1969	Rosen	623/4
4,043,331	8/1977	Martin et al. .	
4,044,404	8/1977	Martin et al. .	
4,249,272	2/1981	Poler	623/6
4,253,199	3/1981	Banko .	
4,285,073	8/1981	Szycher .	
4,298,004	11/1981	Schachar et al. .	
4,304,012	12/1981	Richard .	
4,306,318	12/1981	Mano et al. .	
4,323,525	4/1982	Bornat .	
4,345,414	8/1982	Bornat et al. .	
4,373,218	2/1983	Schachar .	
4,409,691	10/1983	Levy .	
4,470,159	9/1984	Peyman .	
4,524,036	6/1985	Gilding et al. .	
4,550,713	11/1985	Hyman .	
4,552,707	11/1985	How	264/24
4,586,929	5/1986	Binder	623/5
4,601,556	7/1986	Siviglia	351/160 R
4,607,617	8/1986	Choyce .	
4,612,012	9/1986	White	623/5
4,615,700	10/1986	Federov et al.	623/6
4,615,701	10/1986	Woods	623/6
4,615,702	10/1986	Koziol et al.	623/6
4,657,793	4/1987	Fisher	428/36
4,689,186	8/1987	Bornat	264/6
4,693,715	9/1987	Abel	623/5
4,715,858	12/1987	Lindstrom	623/5
4,798,607	1/1989	Middleton et al.	623/1
4,806,382	2/1989	Goldberg et al.	427/1
4,842,505	6/1989	Annis et al.	425/174.8 E
4,842,599	6/1989	Bronstein	623/5
4,842,601	5/1989	Smith	623/5
4,865,601	9/1989	Caldwell et al.	623/5
4,883,453	11/1989	Berry et al.	600/36
4,932,968	6/1990	Caldwell et al.	623/6
4,965,110	10/1990	Berry	428/36.4
5,019,097	5/1991	Knight et al.	623/5

FOREIGN PATENT DOCUMENTS

333344	9/1989	European Pat. Off. .	
2705234	8/1978	Fed. Rep. of Germany	623/5
1660694	7/1991	U.S.S.R.	623/5
2120946	12/1983	United Kingdom .	

Primary Examiner—Randall L. Green
Assistant Examiner—Mary Beth Jones
Attorney, Agent, or Firm—Kenyon & Kenyon

[57] ABSTRACT

A prosthesis for implanting in an eye has a lens member and a double interface member which is coupled to the periphery of the lens member. The double interface member is comprised of a more superficial branch and a deeper branch which project out from the lens member. The double interface member has a plurality of pores for permitting the ingrowth of tissue to anchor the prosthesis to the eye. The double interface member also has an anatomical structure into which eye tissue is inserted, so as to become an immediate anchor to the eye and an immediate barrier to external pathogens.
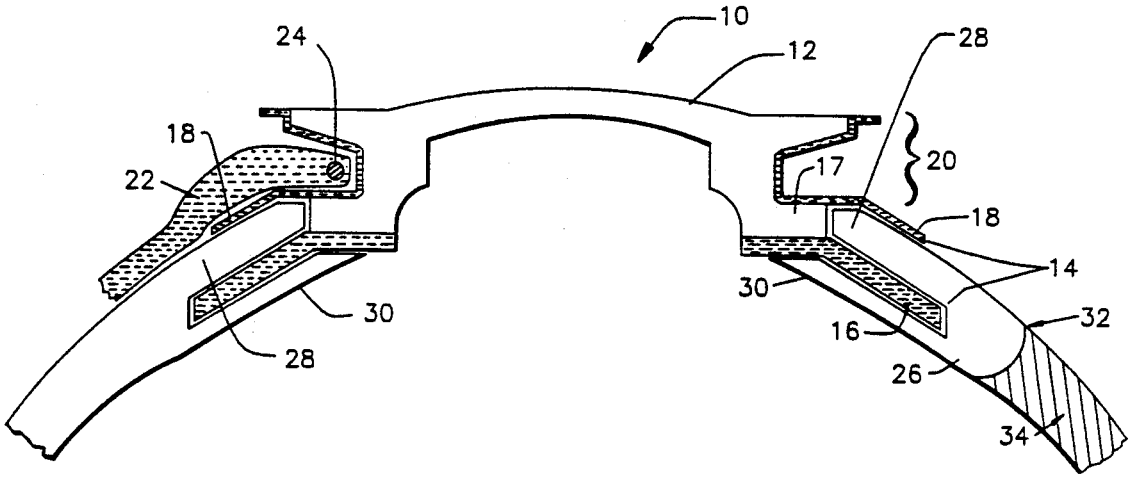
14 Claims, 2 Drawing Sheets