(No Model.) 2 Sheets—Sheet 1.

S. B. HENDRICKS.

HARROW.

No. 399,614. Patented Mar. 12, 1889.

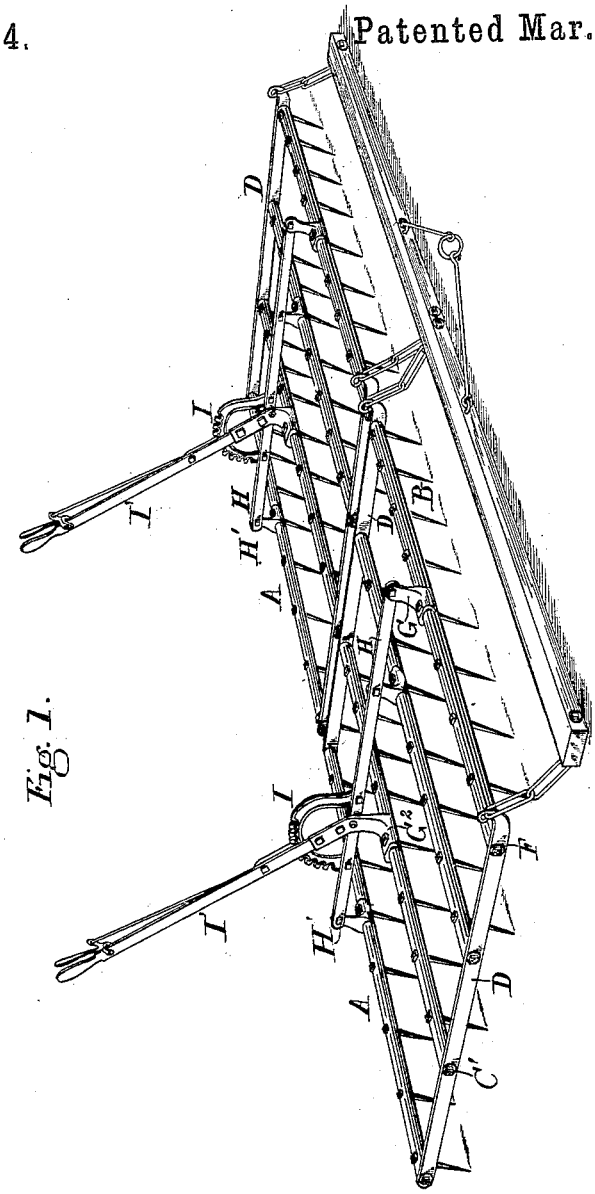

Fig. 1.

Witnesses:
F. S. Regan,
E. T. Dowling.

Inventor:
Simeon B. Hendricks,
per L. L. Morrison,
Attorney.

N. PETERS, Photo-Lithographer, Washington, D. C.