FIG. 1

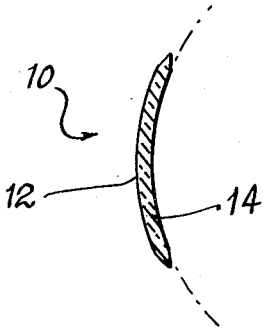

FIG. 2

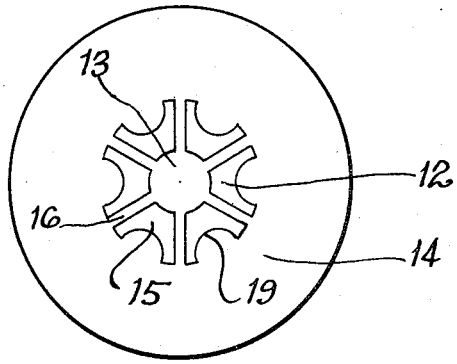

FIG. 3

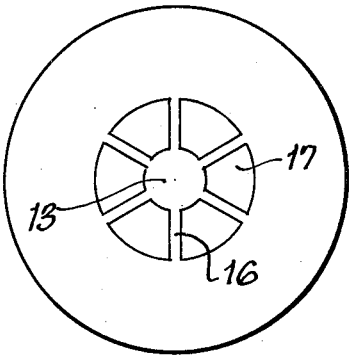

FIG. 4

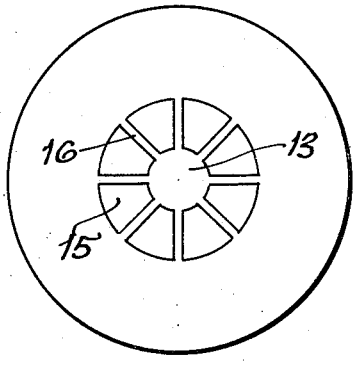

FIG. 5

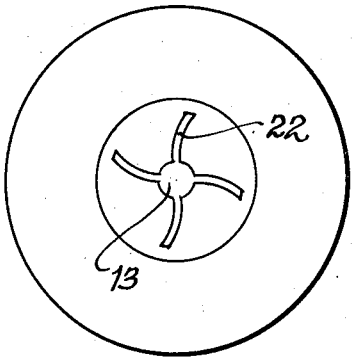

FIG. 6

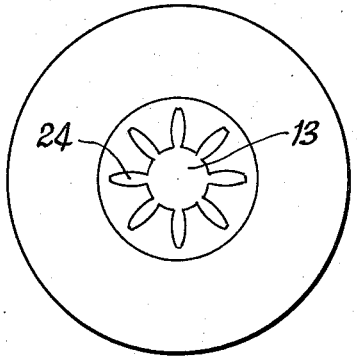

FIG. 7

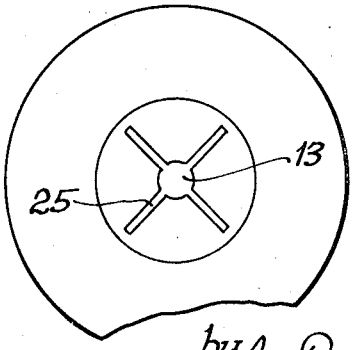

INVENTOR
Newton K. Wesley
by McDougall, Hersh & Scott
Attys