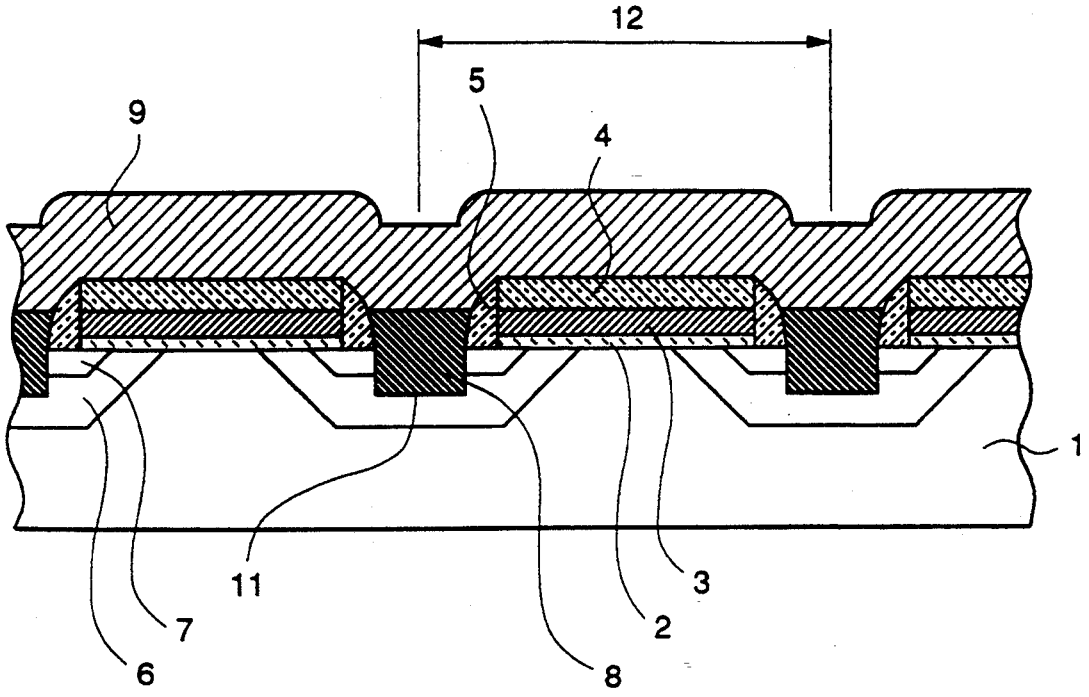FIGURE 1