United States Patent [19]

Nolan et al.

[11] **4,265,714**

[45] **May 5, 1981**

[54] **GAS SENSING AND MEASURING DEVICE AND PROCESS USING CATALYTIC GRAPHITE SENSING ELECTRODE**

[75] Inventors: **Mary E. Nolan**, Topsfield; **John A. Kosek**, Danvers; **Anthony B. La Conti**, Lynnfield, all of Mass.

[73] Assignee: **General Electric Company**, Wilmington, Mass.

[21] Appl. No.: **133,163**

[22] Filed: **Mar. 24, 1980**

[51] **Int. Cl.**[3] **G01N 27/52**

[52] **U.S. Cl.** ..... **204/1 T**; 204/195 S

[58] **Field of Search** ..... 204/195 S, 195 R, 1 T, 204/1 B, 1 N, 1 K; 324/464, 465, 425; 422/98

[56] **References Cited**

U.S. PATENT DOCUMENTS

3,134,697	5/1964	Niedrach .	
3,432,355	3/1969	Niedrach et al. .	
3,776,832	12/1973	Oswin et al.	204/195 R
3,824,167	7/1974	Oswin et al.	204/195 R
3,992,271	11/1976	Danzig et al.	204/129
4,001,103	1/1977	Blurton et al.	204/195 R
4,042,464	8/1977	Blurton et al.	204/1 T
4,052,268	10/1977	Blurton et al.	204/1 T
4,123,700	10/1978	La Conti et al.	204/195 S X
4,171,253	10/1979	Nolan et al.	204/195 S
4,197,177	4/1980	Proctor	204/195 R

OTHER PUBLICATIONS

J. M. Sedlak et al., J. Electrochem. Soc., pp. 1476–1478, Oct. 1976.

"The Condensed Chemical Dictionary", Eighth edition, p. 426, (1971).

Primary Examiner—G. L. Kaplan

Attorney, Agent, or Firm—I. David Blumenfeld

[57] **ABSTRACT**

A gas detecting and measuring device and method highly selective for the detection of certain gases is described. The gas detector is capable of detecting and measuring a gas which can be electrochemically oxidized or electrochemically reduced at a voltage of between about 0.6 and 1.5 volts relative to a standard hydrogen electrode. The gas detecting and measuring device and process are highly selective for the oxides of nitrogen (NO_x) and chlorine. The gas detecting device utilizes a hydrated, solid polymer electrolyte ion transporting membrane in electrical contact with an improved catalytic graphite sensing electrode. For detecting an oxidizable gas such as nitric oxide (NO), an improved graphite anode in contact with the solid polymer electrolyte is used with a cathode and a reference electrode as an electrochemical cell, and for detecting a reducible gas such as chlorine (Cl_2) or nitrogen dioxide (NO_2), an improved graphite cathode is used with an anode and a reference electrode as an electrochemical cell. Under an applied voltage, oxidizable gas is oxidized at the graphite anode and is detected or measured by a suitable circuit as a result of the current generated by the oxidation reaction, or reducible gas is reduced at the graphite cathode and is detected or measured by a suitable circuit as a result of the current generated by the reduction reaction.
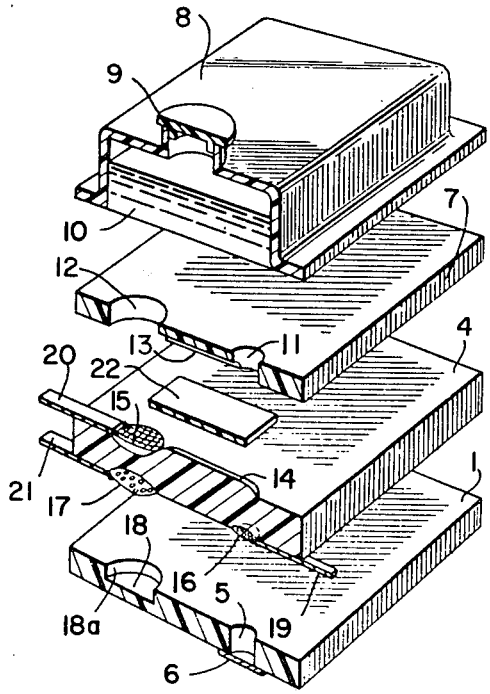
41 Claims, 7 Drawing Figures