US009241414B2

(12) **United States Patent**
Ozolins et al.

(10) **Patent No.: US 9,241,414 B2**
(45) **Date of Patent: *Jan. 19, 2016**

(54) **BEZEL-LESS ELECTRONIC DISPLAY**

(71) Applicant: **BLOOMBERG FINANCE L.P.**, New York, NY (US)

(72) Inventors: **Helmars E. Ozolins**, Orient, NY (US); **Masamichi Udagawa**, New York, NY (US)

(73) Assignee: **Bloomberg Finance L.P.**, New York, NY (US)

(*) Notice: Subject to any disclaimer, the term of this patent is extended or adjusted under 35 U.S.C. 154(b) by 0 days.

This patent is subject to a terminal disclaimer.

(21) Appl. No.: **14/204,562**

(22) Filed: **Mar. 11, 2014**

(65) **Prior Publication Data**

US 2014/0247543 A1 Sep. 4, 2014

Related U.S. Application Data

(63) Continuation of application No. 13/588,223, filed on Aug. 17, 2012, now Pat. No. 8,710,728, which is a continuation of application No. 12/965,026, filed on Dec. 10, 2010, now Pat. No. 8,264,135, which is a

(Continued)

(51) **Int. Cl.**

H05K 5/00	(2006.01)
G02F 1/1333	(2006.01)
H01K 1/26	(2006.01)

(Continued)

(52) **U.S. Cl.**

CPC ***H05K 5/0017*** (2013.01); ***G02F 1/1333*** (2013.01); ***G02F 1/133308*** (2013.01); ***G06F 1/1601*** (2013.01); ***G09F 7/20*** (2013.01); ***G09F 15/0087*** (2013.01); ***H05K 5/02*** (2013.01); *G02F 2001/13332* (2013.01);

(Continued)

(58) **Field of Classification Search**

None

See application file for complete search history.

(56) **References Cited**

U.S. PATENT DOCUMENTS

3,909,525	A	9/1975	Fagan
D278,820	S	5/1985	Woodhall

(Continued)

FOREIGN PATENT DOCUMENTS

EP	0403760	A2	12/1990
EP	2000196718		5/2000

(Continued)

OTHER PUBLICATIONS

Bloomberg LP, "The Bloomberg® Flat Panel," brochure, Copyright 2000, 4 pages.

(Continued)

Primary Examiner — Ashok Patel

(74) *Attorney, Agent, or Firm* — Chiesa Shahinian & Giantomasi PC

(57) **ABSTRACT**

A bezel-less display is disclosed that includes an electronic display device and a cover. The electronic display device has an image-displaying portion and another portion adjacent the image-displaying portion along at least one side. The cover, which may include a glass or plastic sheet, is positioned adjacent the electronic display device and includes a first portion positioned adjacent the image-displaying portion of the display device and a second portion positioned adjacent the other portion of the display device. The optical properties of the first portion are also selected to transmit images displayed on the image-displaying portion and the optical properties of the second portion are selected to mask the other portion of the display device.
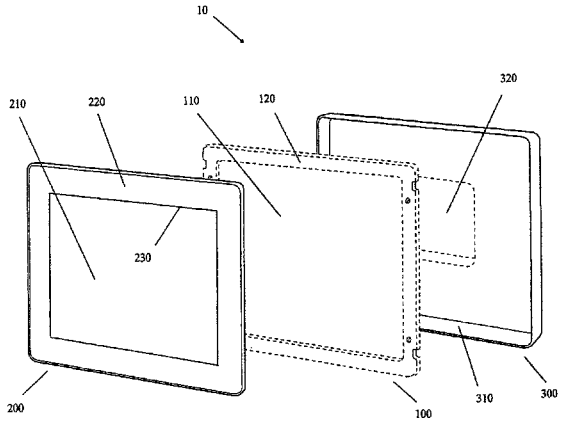
14 Claims, 10 Drawing Sheets