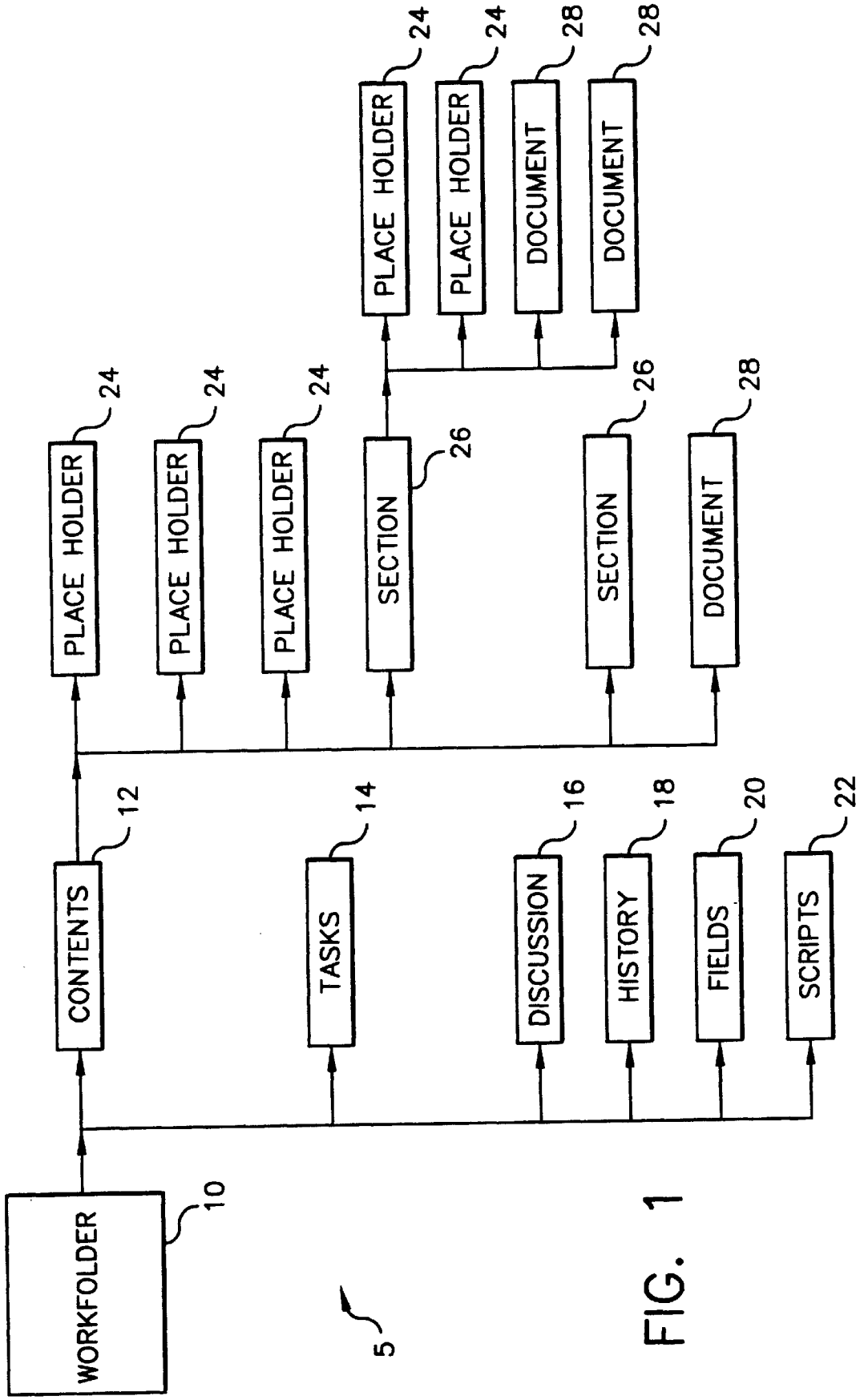
WORKFOLDER
10
CONTENTS
12
TASKS
14
DISCUSSION
16
HISTORY
18
FIELDS
20
SCRIPTS
22
PLACE HOLDER
24
PLACE HOLDER
24
PLACE HOLDER
24
SECTION
26
SECTION
26
DOCUMENT
28
PLACE HOLDER
24
PLACE HOLDER
24
DOCUMENT
28
DOCUMENT
28
5

FIG. 1