March 15, 1966 F. JONKER ETAL 3,240,114

INFORMATION STORAGE AND RETRIEVAL COPY APPARATUS

Filed Nov. 17, 1961 6 Sheets-Sheet 1

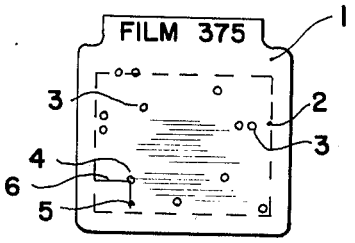

Fig 1

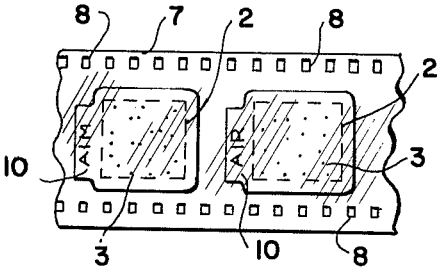

Fig 2

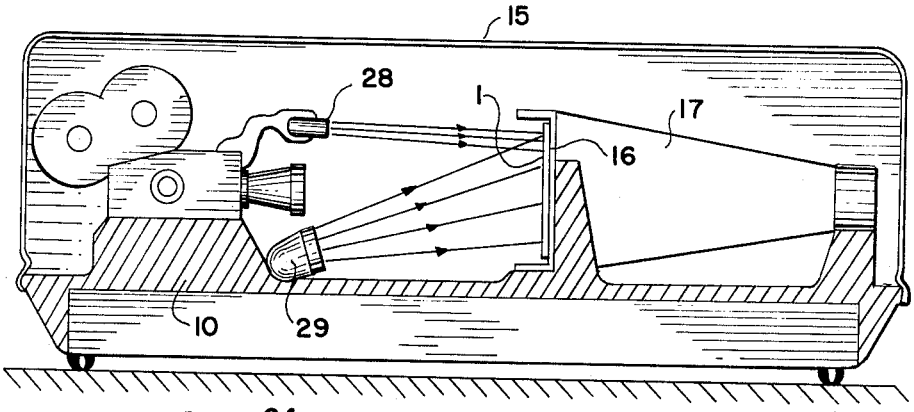

Fig 5

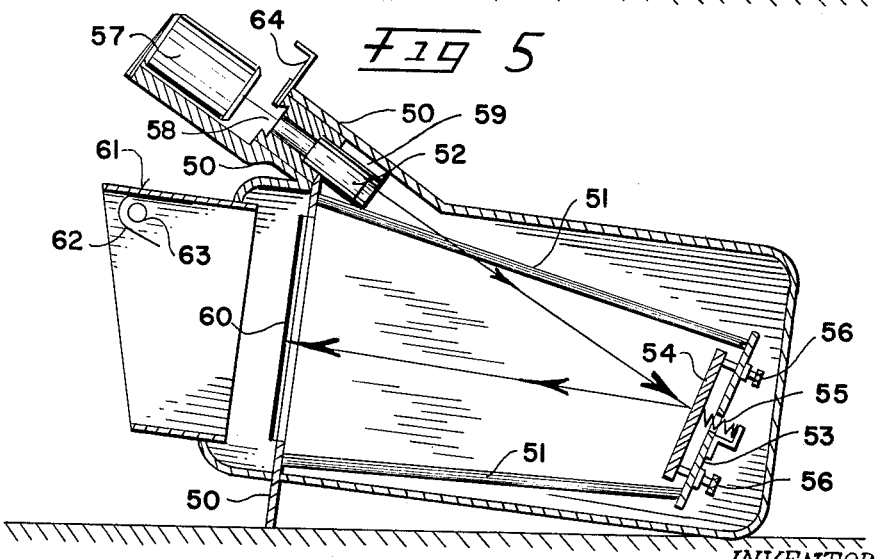

Fig 6

INVENTORS:
William Parks III, William P. Gingras, Frederick Jonker

BY Homer R. Montague
Att'y.