US005739814A

United States Patent [19]

Ohara et al.

[11] Patent Number: 5,739,814

[45] Date of Patent: *Apr. 14, 1998

[54] **INFORMATION STORAGE SYSTEM AND BOOK DEVICE FOR PROVIDING INFORMATION IN RESPONSE TO THE USER SPECIFICATION**

[75] Inventors: **Makoto Ohara**, Tokyo; **Shinichirou Sugiura**, Fokyo, both of Japan

[73] Assignee: **Sega Enterprises**, Tokyo, Japan

[*] Notice: The term of this patent shall not extend beyond the expiration date of Pat. No. 5,485,176.

[21] Appl. No.: **951,862**

[22] Filed: **Sep. 28, 1992**

[51] **Int. Cl.**[6] **G09G 3/02**

[52] **U.S. Cl.** **345/173**; 345/156; 345/179

[58] **Field of Search** 341/31–34; 434/336; 345/156, 173, 175, 179

[56] **References Cited**

U.S. PATENT DOCUMENTS

3,600,592	8/1971	Mahan et al.	341/31 X
4,782,335	11/1988	Gussin .	
4,802,092	1/1989	Harte .	
4,809,246	2/1989	Jeng .	
4,820,167	4/1989	Nobles et	434/336
4,839,634	6/1989	More et al. .	
4,862,152	8/1989	Milner .	
4,862,497	8/1989	Seto et al. .	
4,879,557	11/1989	Roche	341/31 X
4,884,974	12/1989	Desmet .	
4,890,096	12/1989	Taguchi et al. .	
4,891,474	1/1990	Kelly .	
4,899,368	2/1990	Krohn et al.	379/355 X
4,907,264	3/1990	Seiler et al.	379/355
4,933,544	6/1990	Tamaru .	
5,034,598	7/1991	Poland	341/31 X
5,209,665	5/1993	Billings et al.	341/34 X
5,485,176	1/1996	Ohara et al.	345/156

FOREIGN PATENT DOCUMENTS

0313976	10/1988	European Pat. Off. .
0364884	10/1989	European Pat. Off. .
A0390303	10/1990	European Pat. Off. .
0455147	4/1991	European Pat. Off. .
50-118355	4/1977	Japan .
52-75428	6/1977	Japan .
56-214622	12/1981	Japan .
59-068072	4/1984	Japan .
59-111560	6/1984	Japan .
60-151732	8/1985	Japan .
62-107360	5/1987	Japan .
2127598A	4/1984	United Kingdom .
2149544	6/1985	United Kingdom .
9015402	6/1990	WIPO .
WO9107715	11/1990	WIPO .
WO9215077	2/1992	WIPO .

OTHER PUBLICATIONS

BYTE, vol. 16, No. 9, Sep. 1991, pp 881S–7 to 881S–12, "Kyocera Rustles Up the Refalo", by Andy Redfern.

Machine Design, Cleveland, Ohio, Vo. 63, No. 17, Aug. 22, 1991, p. 30, "Electronic Sketch Pad Turns TV Into Easel".

Primary Examiner—Richard Hjerpe
Assistant Examiner—Amare Mengistu
Attorney, Agent, or Firm—Price, Gess & Ubell

[57] **ABSTRACT**

An electronic book which can store, in a ROM, a computer program, is integrated with graphic and textual material on a series of pages. Various input devices such as a finger, a light pen, a touch pen, etc. can be utilized with a sensing circuit combined with the page for inputting data into the computer system. The computer system can display this information in both an audio and visual manner.
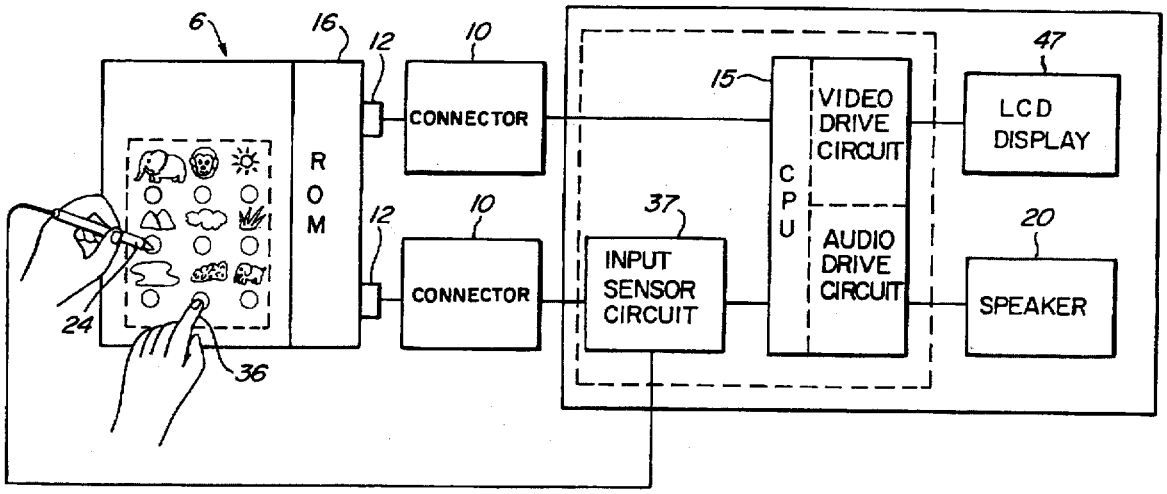
22 Claims, 6 Drawing Sheets