US009638314B2

(12) **United States Patent**
Cradit et al.

(10) **Patent No.: US 9,638,314 B2**
(45) **Date of Patent: May 2, 2017**

(54) **ECO LUBRICATION METHOD FOR A TRANSFER CASE**

(71) Applicant: **BorgWarner Inc.**, Auburn Hills, MI (US)

(72) Inventors: **Jeremy L. Cradit**, Grand Blanc, MI (US); **Christopher J. Kowalsky**, Windsor (CA); **Kristoffer Nilsson**, Lund (SE); **Daniel Kent Rosengren**, Helsingborg (SE); **John Rode**, Swartz Creek, MI (US)

(73) Assignee: **BorgWarner Inc.**, Auburn Hills, MI (US)

(*) Notice: Subject to any disclaimer, the term of this patent is extended or adjusted under 35 U.S.C. 154(b) by 40 days.

(21) Appl. No.: **14/806,769**

(22) Filed: **Jul. 23, 2015**

(65) **Prior Publication Data**

US 2016/0040776 A1 Feb. 11, 2016

Related U.S. Application Data

(60) Provisional application No. 62/033,259, filed on Aug. 5, 2014.

(51) **Int. Cl.**

F16H 57/04	(2010.01)
F16D 13/74	(2006.01)
B60K 23/08	(2006.01)
F16D 25/12	(2006.01)

(52) **U.S. Cl.**

CPC ***F16H 57/0473*** (2013.01); ***F16H 57/0434*** (2013.01); *B60K 23/08* (2013.01); *F16D 13/74* (2013.01); *F16D 25/123* (2013.01); *F16D 2300/06* (2013.01); *F16H 57/045* (2013.01)

(58) **Field of Classification Search**

CPC F16H 57/045; F16H 57/0445; F16H 57/0487; F16H 57/0489; F16H 57/0457; F16H 57/0473; F16D 13/74; F16D 25/123; F16D 2300/06; B60K 23/08–2023/0891

See application file for complete search history.

(56) **References Cited**

U.S. PATENT DOCUMENTS

4,091,905	A	5/1978	Sieren et al.	
4,699,249	A	10/1987	Fujiura et al.	
5,366,419	A	11/1994	Oda	
5,819,192	A *	10/1998	Wakahara	B60K 23/0808 180/247
6,582,331	B1	6/2003	Baxter, Jr.	
7,743,888	B2	6/2010	Allen et al.	
8,428,838	B2 *	4/2013	Kondo	B60K 23/08 701/69
8,776,950	B2 *	7/2014	Quehenberger	B60K 17/02 184/6.12
9,441,726	B1 *	9/2016	Palazzolo	F16H 57/0436

(Continued)

FOREIGN PATENT DOCUMENTS

JP	2000142142 A	5/2000

Primary Examiner — Ramya Burgess
Assistant Examiner — David Morris
(74) *Attorney, Agent, or Firm* — BrooksGroup

(57) **ABSTRACT**

A number of variations may comprise a method comprising: a lubrication system for a transfer case comprising: actively managing an oil level in a plurality of sumps in a transfer case by rotating at least one rotating element in the transfer case to transfer oil through the transfer case to lubricate the transfer case.
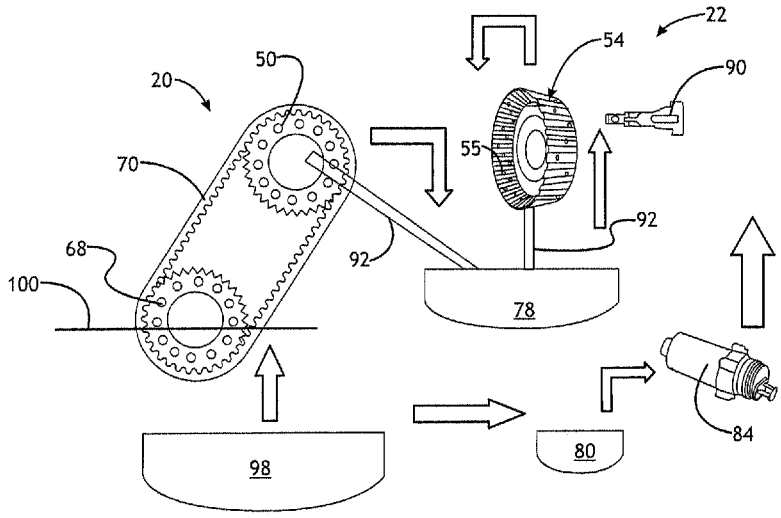
18 Claims, 8 Drawing Sheets