(Model.)

G. C. BRIGGS.
Packing Box.

No. 236,414. **Patented Jan. 11, 1881.**

Fig. 1.

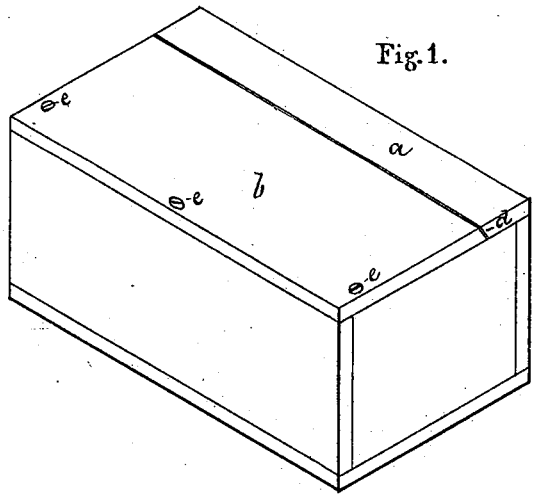

Fig. 2.

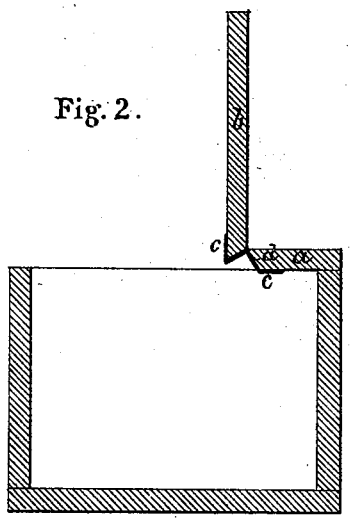

WITNESSES:

Luther Briggs

Chilton L. Doggett.

INVENTOR:

George C. Briggs

N. PETERS, PHOTO-LITHOGRAPHER, WASHINGTON, D. C.